Technical data sheet

Surge protection for LED systems 230V

Item number: 5092480

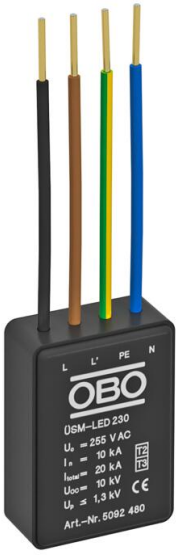

Surge protection module type 2+3 to DIN EN 61643-11 for 230/400 V power grids.
Appropriate for the protection of LED lighting.

- With visual function display
- Small size for the installation in the pole or in the LED lamp head
- 1+NPE protective circuit with a maximum discharge capacity of 20 kA
- Surge limitation under 1,300 V or 1,000 V @ 5 kA
- Available with or without cut-off function of the lamp in case of malfunction

Application: Universally deployable in all lighting systems
To protect electronic devices such as LED luminaires against surge voltages

LPZ 1→3 Type 2+3

Master data

Item number	5092480
Type	ÜSM-LED 230
Description 1	Surge protective Modul
Description 2	for LED lamps
Manufacturer	OBO
Dimension	230V
Smallest sales unit	1
Unit of quantity	Piece
Weight	3.5 kg
Weight unit	kg/100 pc.
CO2 Footprint (GWP) Cradle-to-Gate	0,0251 kg CO2e / 1 Piece

Technical data sheet

Surge protection for LED systems 230V

Item number: 5092480

Dimensions

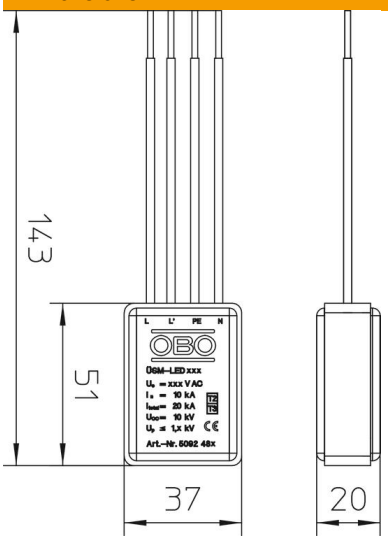

Technical data

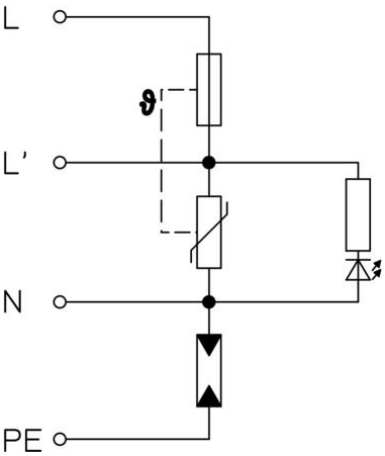

Arrester surge current (8/20 µs) [total]	20 kA
Connecting cable length	0.09 m
Response time	<25 ns
Version for	1+NPE
Pole version	1+N/PE
Structural width in division units (division unit, 17.5 mm)	Miscellaneous
Operating temperature, max.	80 °C
Operating temperature, min.	-40 °C
Remote signalling	no
Maximum continuous voltage (L-N)	255 V
Maximum continuous voltage (N-PE)	255 V
Maximum continuous voltage AC	255 V
Integrated back-up fuse	no
Lightning protection zone LPZ	1→3
Max. mains-side overcurrent protection	16
Maximum back-up fuse	16 A
Maximum discharge current (8/20 µs)	20 kA
Maximum discharge current (8/20 µs) [L-N]	20 kA
Maximum discharge current (8/20 µs) [N-PE]	20 kA
Installation type	Miscellaneous
Nominal discharge current (8/20 µs)	10 kA
Nominal discharge current (8/20 µs) [L-N]	10 kA

Technical data sheet

Surge protection for LED systems 230V

Item number: 5092480

Technical data

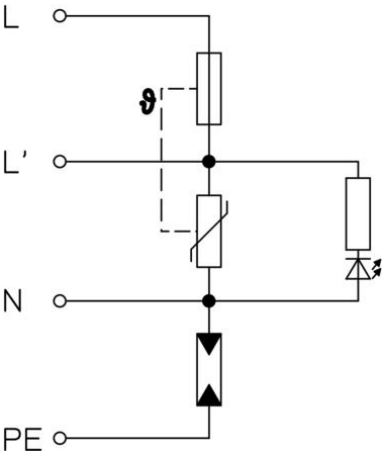

Nominal discharge current (8/20 µs) [N-PE]	10 kA
Nominal voltage AC (50/60 Hz)	230 V
Network form	Other
OBO_Nominal load current (input/output terminal)	16 A
Test class, type 2	yes
Test class, type 3	yes
ROHS-conformant	yes
Protection rating	IP20
Protection level	1,3 kV
Protection level [L-N]	≤1,3
Signalling on device	Visual
SPD to EN 61643-11	Type 2+3
SPD to IEC 61643-11	Class II+III
Permitted temperature range, max.	80 °C
Permitted temperature range, min.	-40 °C