Technical data sheet

Surge protection module 230 V

Item number: 5092451

Surge protection module type 3 to DIN EN 61643-11 for 230 V power grids.

- With audible defect signal
- With low construction height
- Halogen-free plastic (UL 94 V-0)
- Y circuit

Application: Universally applicable for all installation systems.

Type 3 | LPZ 2→3 | AS

Master data

Item number	5092451
Type	ÜSM-A
Description 1	Surge protective Modul
Description 2	for all installation systems
Manufacturer	OBO
Dimension	255V
Smallest sales unit	1
Unit of quantity	Piece
Weight	1.5 kg
Weight unit	kg/100 pc.
CO2 Footprint (GWP) Cradle-to-Gate	0,0232 kg CO2e / 1 Piece

Technical data sheet

Surge protection module 230 V

Item number: 5092451

Dimensions

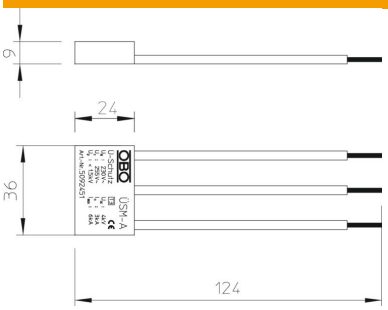

Technical data

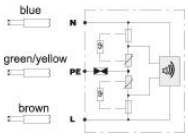

Response time	<25 ns
Version for	Acousticoperating display
Pole version	Other
Operating temperature, max.	60 °C
Operating temperature, min.	-15 °C
Combined voltage protection level [L-PE]	1500 kV
Maximum continuous voltage AC	255 V
Lightning protection zone LPZ	2→3
Max. mains-side overcurrent protection	16
Maximum back-up fuse	16 A
Maximum discharge current (8/20 µs)	6 kA
Installation type	Miscellaneous
Nominal discharge current (8/20 µs)	3 kA
Nominal voltage AC (50/60 Hz)	230 V
Network form	Other
OBO_Nominal load current (input/output terminal)	16 A
ROHS-conformant	yes
Protection level	≤1,3 kV
Protection level [L-N]	≤1500
Protection level [N-PE]	1.5 kV
Protection level wire-earth	1500 V
Signalling on device	Acoustic
SPD to EN 61643-11	Type 3
SPD to IEC 61643-11	Class III
Permitted temperature range, max.	60 °C
Permitted temperature range, min.	-15 °C