Technical data sheet

isFang, insulated air-termination rod for inner-routed is-Con® conductor Professional Plus
Item number: 5408934

- For installation of the OBO isCon® Pro+ conductor in the pipe
- For mounting on the building structure with isFang support
- Suitable for wind loads according to Eurocode 1: DIN EN 1991-1-4
- Inclusive connection element (type isCon IN connect)
- Inclusive potential connection (type isCon In PAE)
- Aluminium standpipe and air-termination tip
- Centre section made of fibre-glass reinforced plastic (GRP)

GFK Fibre-glass-reinforced plastic

Master data

Item number	5408934
Type	isFang IN 4000
Description 1	Insulated interception rod
Description 2	for isCon conductor, internal
Manufacturer	OBO
Dimension	4000mm
Material	Fibre-glass-reinforced plastic
Smallest sales unit	1
Unit of quantity	Piece
Weight	535 kg
Weight unit	kg/100 pc.
CO2 Footprint (GWP) Cradle-to-Gate	52,3752 kg CO2e / 1 Piece

Technical data sheet

isFang, insulated air-termination rod for inner-routed is-Con® conductor Professional Plus
Item number: 5408934

Dimensions

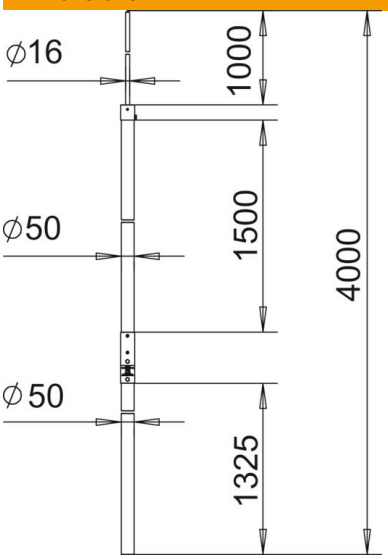

Length	4,000 mm
Dimension A	1,325 mm
Dimension B	1,000 mm
Dimension d min.	50 mm
Dimension H	1,500 mm
Dimension L	4,000 mm

Technical data

Connection	Round conductor
Version for	Air-termination rod
High voltage-resistant, insulated version	yes