Technical data sheet

Insulated air-termination rod for inner-routed isCon conductor with side exit
Item number: 5408888

- For installation of the OBO isCon® Pro+ conductor in the pipe
- With side conductor outlet matching isFang air-termination rod stand with side outlet, type isFang 3B-A
- Suitable for wind loads according to Eurocode 1: DIN EN 1991-1-4
- Inclusive connection element (type isCon IN connect)
- Inclusive potential connection (type isCon In PAE)
- Aluminium standpipe and air-termination tip
- Centre section made of fibre-glass reinforced plastic (GRP)

GFK Fibre-glass-reinforced plastic

Master data

Item number	5408888
Type	isFang IN-A 8000
Description 1	Insul. interception rod+outlet
Description 2	for isCon conductor, internal
Manufacturer	OBO
Dimension	8000mm
Material	Fibre-glass-reinforced plastic
Smallest sales unit	1
Unit of quantity	Piece
Weight	1385 kg
Weight unit	kg/100 pc.
CO2 Footprint (GWP) Cradle-to-Gate	130,9774 kg CO2e / 1 Piece

Technical data sheet

Insulated air-termination rod for inner-routed isCon conductor with side exit
Item number: 5408888

Dimensions

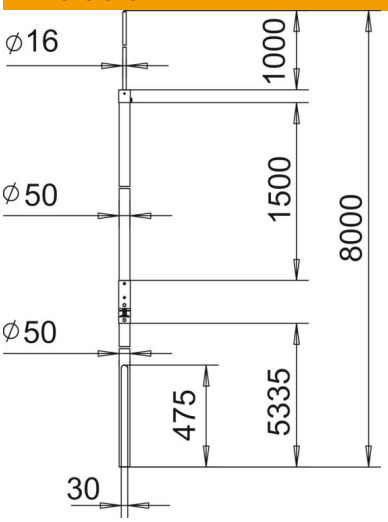

Length	8,000 mm
Dimension A	5,335 mm
Dimension B	1,000 mm
Dimension d min.	50 mm
Dimension H	1,500 mm
Dimension L	8,000 mm

Technical data

Connection	Round conductor
Version for	Air-termination rod
High voltage-resistant, insulated version	yes