Technical data sheet

Empty housing X 16 with hat profile rail

Item number: 2005498

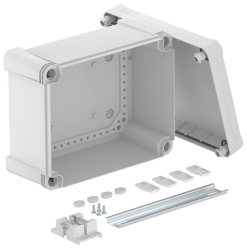

Junction box with hat profile rail for the connection of cables and lines indoors and in outdoor areas. Rectangular design without entries. Suitable for wall and ceiling mounting with the option to fasten outside, inside or to mount via the corner domes. Particularly impact resistant with IK09. Cover with quick lock, sealable. Made from halogen-free and UV-resistant materials.

With hat profile rail 2069 and fastening set.

Junction box according to DIN EN 60670. Impact resistance IK09 according to DIN EN 50102. Protection rating IP67 according to DIN EN 60529.

PC Polycarbonate

Master data

Item number	2005498
Type	X16C R LGR
Description 1	Empty Enclosure
Description 2	with rail 2069
Manufacturer	OBO
Dimension	240x191x125
Colour	Light grey; RAL 7035
Material	Polycarbonate
Smallest sales unit	1
Unit of quantity	Piece
Weight	87.3 kg
Weight unit	kg/100 pc.
CO2 Footprint (GWP) Cradle-to-Gate	3,2922 kg CO2e / 1 Piece

Technical data sheet

Empty housing X 16 with hat profile rail

Item number: 2005498

Dimensions

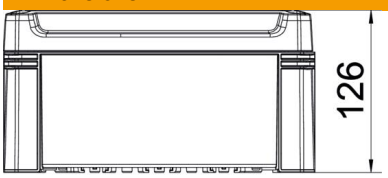

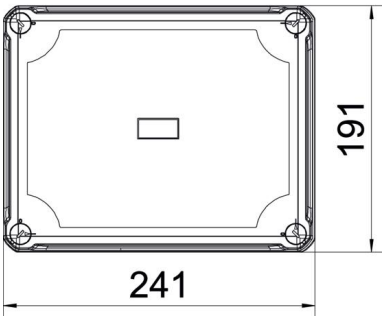

Length	241 mm
Width	191 mm
Height	126 mm

Technical data

Extension option	no
Equipment	Support rail
Cover fastening	Screwed
Shape	Rectangular
Suitable for outdoor use	yes
Clear internal dimensions	227x177x110 mm
with lid	yes
Mounting type	Surface-mounted
ROHS-conformant	yes
Protection rating	IP67
Protection rating IK code	IK09
Protection class	II
Permitted temperature range, max.	65 °C
Permitted temperature range, min.	-25 °C
Weatherproof	yes