# Technical data sheet

## Junction box X 01 with cable gland

## Item number: 2005030

Junction box for the connection of cables and lines indoors and in outdoor areas. Square design with knock-out entries. Suitable for wall and ceiling mounting with the option to fasten outside, inside or to mount via the corner domes. Particularly impact resistant with IK09. Cover with quick lock, sealable. Made from halogen-free and UV-resistant materials.

Including 3 cable glands V-TEC M20 and 3 locknuts.

Junction box according to DIN EN 60670. Flame-resistant to DIN EN 60695/2/11, test temperature 650 °C. Impact resistance IK09 according to DIN EN 50102. Protection rating IP67 according to DIN EN 60529.

PC Polycarbonate

### Master data

| | |
|---|---|
| Item number | 2005030 |
| Type | X01 G M20 LGR |
| Description 1 | Junction box |
| Description 2 | with 3xV-TEC VM and 3x116 |
| Manufacturer | OBO |
| Dimension | 95x95x60 |
| Colour | Light grey; RAL 7035 |
| Material | Polycarbonate |
| Smallest sales unit | 1 |
| Unit of quantity | Piece |
| Weight | 19 kg |
| Weight unit | kg/100 pc. |
| CO2 Footprint (GWP) Cradle-to-Gate | 0,8349 kg CO2e / 1 Piece |

# Technical data sheet

## Junction box X 01 with cable gland

## Item number: 2005030

### Dimensions

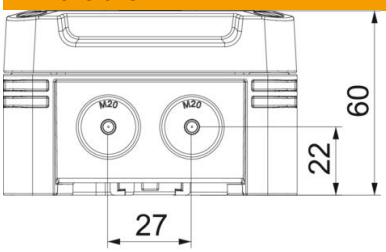


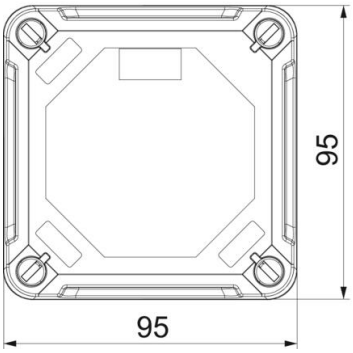


| | |
|---|---|
| Length | 95 mm |
| Width | 95 mm |
| Height | 60 mm |

### Technical data

| | |
|---|---|
| Expandable | yes |
| No. of entries | 7 |
| Type of entry | Gland |
| Type of housing penetration | Pre-marking |
| Measured insulation voltage Vi | 750 V |
| Equipment | Miscellaneous |
| Cover | Not transparent |
| Cover fastening | Screwed |
| Entry from rear | no |
| Entries | 7 x Ø20 |
| Explosion-tested version | no |
| Flame-resistant | acc. to VDE 0471/DIN 695 Part 2-1, test temperature 650°C |
| Shape | Square |
| Fibre-glass reinforced | yes |
| Halogen-free | yes |
| Clear internal dimensions | 85x85x45 mm |
| Max. Conductor cross-section | 1.5 mm² |
| With screening | no |
| with lid | yes |
| Mounting type | Wall/ceiling mounting |
| Nominal cross-section, max. | 1.5 mm² |
| Nominal cross-section, min. | 0.8 mm² |
| Nominal voltage | 750 V |
| Sealable | yes |
| ROHS-conformant | yes |
| Impact-resistant | yes |
| Protection rating | IP67 |

# Technical data sheet

## Junction box X 01 with cable gland

## Item number: 2005030

### Technical data

| | |
|---|---|
| Protection rating IK code | IK09 |
| Permitted temperature range, max. | 65 °C |
| Permitted temperature range, min. | -25 °C |
| Transparent lid | no |
| Weatherproof | yes |