Technical data sheet

Wide span cable ladder WKLG 160 FT

Item number: 6227155

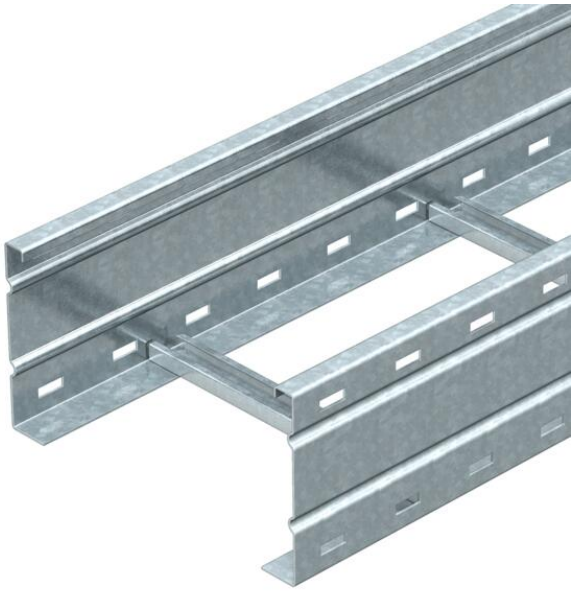

Wide span cable ladder with perforated side rail of side height of 160 mm.
Fastening of cables with clamp clip, type 2056.
Straight connectors of type WRV 160 should be ordered separately and in the appropriate quantity.
Magnetic shield insulation without cover 10 dB, with cover 15 dB.

St Steel

FT Hot-dip galvanised

Master data

Item number	6227155
Type	WKLG 1650 FT
Description 1	Wide span cable ladder
Description 2	perforated side rail
Manufacturer	OBO
Dimension	160x500x6000
Colour	zinc
Material	Steel
Surface	Hot-dip galvanised
Surface standard	DIN EN ISO 1461
Smallest sales unit	6
Unit of quantity	Metre
Weight	867.334 kg
Weight unit	kg/100 m
CO2 Footprint (GWP) Cradle-to-Gate	18,8379 kg CO2e / 1 Meter

Technical data sheet

Wide span cable ladder WKLG 160 FT

Item number: 6227155

Dimensions

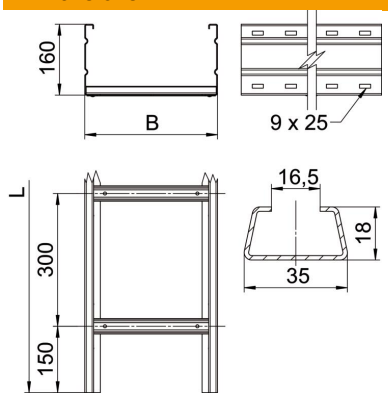

Dimension	160 x 500
Length	6,000 mm
Width	500 mm
Height	160 mm
Dimension B	500 mm
Dimension L	6,000 mm
Rung slot dimension	16.50

Technical data

Version of the rungs	Profile unperforated
Fastening of rung	Fully riveted
Mounting system fastening type	Floor Ceiling Wall
Maintain electrical functions	no
Usable cross-section	717 cm²
Usable cross-section	71700 mm²
ROHS-conformant	yes
Rustproof steel, pickled	no
Side perforation	yes
Wide-span version	yes
Rail thickness	2 mm

Loads

Insertable support spacings, min.	3 m
Insertable support spacings, max.	8 m
Support spacing 3.0 m	3 kN/m
Support spacing 3.5 m	2.73 kN/m
Support spacing 4.0 m	2.5 kN/m
Support spacing 4.5 m	2.24 kN/m
Support spacing 5.0 m	2 kN/m
Support spacing 6.0 m	1.6 kN/m
Support spacing 7.0 m	1.3 kN/m
Support spacing 8.0 m	1 kN/m

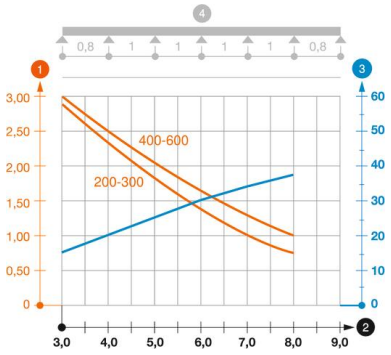

Load diagram, wide span cable ladder, type WKLG 160

1. Permitted cable tray/ladder load in kN/m without man load
2. Support width in m
3. Rail bend in mm at permitted kN/m
4. Load scheme during testing

Load curve with cable tray/ladder width in mm

Strut bend curve according to support width