# Technical data sheet

## Wide span cable ladder WKLG 160 FS

## Item number: 6227058

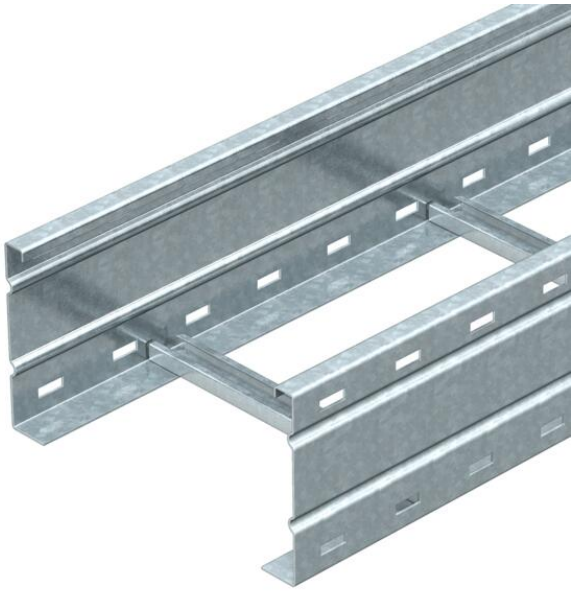

Wide span cable ladder with perforated side rail of side height of 160 mm.
Fastening of cables with clamp clip, type 2056.
Straight connectors of type WRV 160 should be ordered separately and in the appropriate quantity.
Magnetic shield insulation without cover 10 dB, with cover 15 dB.

| | |
|---|---|
| St | Steel |
| FS | Strip galvanised |

### Master data

| | |
|---|---|
| Item number | 6227058 |
| Type | WKLG 1640 FS |
| Description 1 | Wide span cable ladder |
| Description 2 | perforated side rail |
| Manufacturer | OBO |
| Dimension | 160x400x6000 |
| Colour | zinc |
| Material | Steel |
| Surface | Strip galvanised |
| Surface standard | DIN EN 10346 |
| Smallest sales unit | 6 |
| Unit of quantity | Metre |
| Weight | 797.834 kg |
| Weight unit | kg/100 m |
| CO2 Footprint (GWP) Cradle-to-Gate | 19,1133 kg CO2e / 1 Meter |

# Technical data sheet

## Wide span cable ladder WKLG 160 FS

## Item number: 6227058

### Dimensions

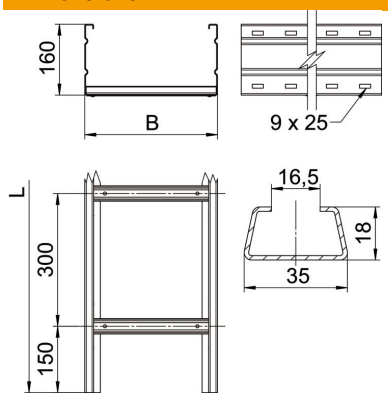


| | |
|---|---|
| Dimension | 160 x 400 |
| Length | 6,000 mm |
| Width | 400 mm |
| Height | 160 mm |
| Dimension B | 400 mm |
| Dimension L | 6,000 mm |
| Rung slot dimension | 16.50 |

### Technical data

| | |
|---|---|
| Version of the rungs | Profile unperforated |
| Fastening of rung | Fully riveted |
| Mounting system fastening type | Floor Ceiling Wall |
| Maintain electrical functions | no |
| Usable cross-section | 572 cm² |
| Usable cross-section | 57200 mm² |
| ROHS-conformant | yes |
| Rustproof steel, pickled | no |
| Side perforation | yes |
| Wide-span version | yes |
| Rail thickness | 2 mm |

# Technical data sheet

## Wide span cable ladder WKLG 160 FS

## Item number: 6227058

### Loads

| | |
|---|---|
| Insertable support spacings, min. | 3 m |
| Insertable support spacings, max. | 8 m |
| Support spacing 3.0 m | 3 kN/m |
| Support spacing 3.5 m | 2.73 kN/m |
| Support spacing 4.0 m | 2.5 kN/m |
| Support spacing 4.5 m | 2.24 kN/m |
| Support spacing 5.0 m | 2 kN/m |
| Support spacing 6.0 m | 1.6 kN/m |
| Support spacing 7.0 m | 1.3 kN/m |
| Support spacing 8.0 m | 1 kN/m |

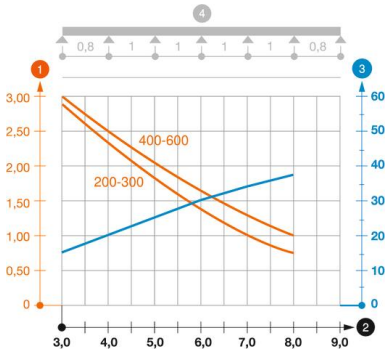


**Load diagram, wide span cable ladder, type WKLG 160**

1. Permitted cable tray/ladder load in kN/m without man load
2. Support width in m
3. Rail bend in mm at permitted kN/m
4. Load scheme during testing

— Load curve with cable tray/ladder width in mm

— Strut bend curve according to support width