Technical data sheet

Wiring trunking VF 30, flexible

Item number: 6132607

Flexible wiring trunking for horizontal and vertical routing in the switchgear cabinet.
Direct mounting on the wall via the integrated base perforation (with double-sided adhesive tape as mounting aid). Hardly inflammable and self-extinguishing after removal of a naked flame. The retainers in the trunking base can be broken out without tools.
Tested to DIN EN 50085-2-3.
Base and cover in set.

PP Polypropylene

Master data

Item number	6132607
Type	VF 30KB rws
Description 1	Slotted cable trunking system
Description 2	VF flex 30 mm adh. 9010
Manufacturer	OBO
Colour	Pure white; RAL 9010
Material	Polypropylene
Smallest sales unit	1
Unit of quantity	Piece
Weight	5 kg
Weight unit	kg/100 pc.

Technical data sheet

Wiring trunking VF 30, flexible

Item number: 6132607

Dimensions

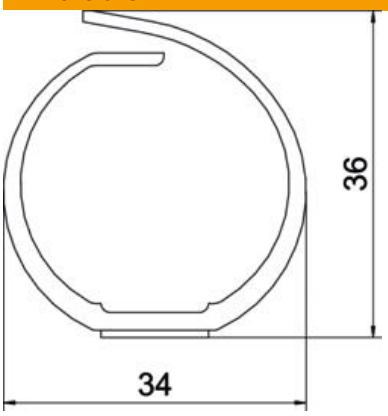

Length	500 mm
Width	34 mm
Height	36 mm

Technical data

Side wall version	Slotted
Fastening type	Self-adhesive and base perforation
Flexible	yes
Halogen-free	yes
Creepage current-resistant	yes
With cover	no
Usable cross-section	8.1 cm²
ROHS-conformant	yes
Slot spacing	13 mm
Slot width	8 mm
Self-extinguishing	yes
Permitted temperature range, max.	60 °C
Permitted temperature range, min.	-5 °C