Technical data sheet

MCR protection for 2-pole for power supply with leak current-free remote signalling, 230 V AC/DC

Item number: 5097939

Type 3 surge protection/fine network protection to EN 61643-11 with leak current-free remote signalling

- With remote signalling: potential-free NC contact for function monitoring
- With installation-friendly, screwless connection terminals
- In space-saving 17.5 mm grid
- Y circuit

Application: Universal use on 35 mm DIN profile rails in any standard distributor housing.

Type 3 | LPZ 2→3 | FS

Master data

Item number	5097939
Type	VF2-230-AC/DC-FS
Description 1	Lightning barrier
Description 2	with remote signalling
Manufacturer	OBO
Dimension	230V AC
Smallest sales unit	1
Unit of quantity	Piece
Weight	6 kg
Weight unit	kg/100 pc.
CO2 Footprint (GWP) Cradle-to-Gate	0,602 kg CO2e / 1 Piece

Technical data sheet

MCR protection for 2-pole for power supply with leak current-free remote signalling, 230 V AC/DC

Item number: 5097939

Dimensions

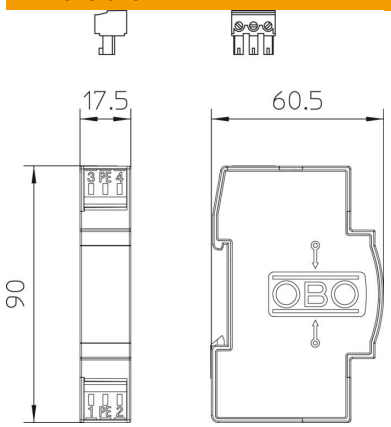

Technical data

[redacted]

Response time	<25 ns
Blow-out	no
Structural width in division units (division unit, 17.5 mm)	1
Operating temperature, max.	80 °C
Operating temperature, min.	-40 °C
Remote signalling	yes
FM contacts	NC contact
Maximum continuous voltage AC	255 V
Maximum continuous voltage DC	350 V
Conductor cross-section, rigid (single-wire/multiwire), max.	2.5 mm²
Conductor cross-section, rigid (single-wire/multiwire), min.	0.14 mm²
Lightning protection zone LPZ	2→3
Maximum discharge current (8/20 µs)	7 kA
Installation type	DIN rail 35 mm
Nominal discharge current (8/20 µs)	2.5 kA
Network form	Other
OBO_Nominal load current (input/output terminal)	20 A
Pole number	3
Test class, type 3	yes
ROHS-conformant	yes
Protection rating	IP20
Protection level [L-N]	≤1000
Protection level wire-wire	< 1000 V
Protection level wire-earth	< 1400 V
Signalling on device	None
SPD to EN 61643-11	Type 3
SPD to IEC 61643-11	Class III
Permitted temperature range, max.	80 °C

Technical data

[redacted]

Permitted temperature range, min.	-40 °C