Technical data sheet

Combination arrester V50, 4-pole 280 V

Item number: 5093513

Lightning current combination arrester, type 1+2

• For lightning current equipotential bonding to VDE 0185-305 (IEC 62305)
• Lightning current arresting capacity of 12.5 kA (10/350) per pole and up to 50 kA (10/350) in total
• Modular, plug-in arrester with cut-off unit and visual status display
• Locking mechanism with vibration protection and voltage keying
• Plastic to UL 94 V-0
• The remote signalling (FS) variants have a potential-free changeover contact for remote signalling

Application: Lightning current equipotential bonding for buildings of class III and IV.
* Complete = Plug-in arrester and base

LPZ 0→2 Type 1+2

Master data

Item number	5093513
Type	V50-4-280
Description 1	CombiController V50
Description 2	4-pole
Manufacturer	OBO
Dimension	280V
Smallest sales unit	1
Unit of quantity	Piece
Weight	61 kg
Weight unit	kg/100 pc.
CO2 Footprint (GWP) Cradle-to-Gate	1,8156 kg CO2e / 1 Piece

Technical data sheet

Combination arrester V50, 4-pole 280 V

Item number: 5093513

Dimensions

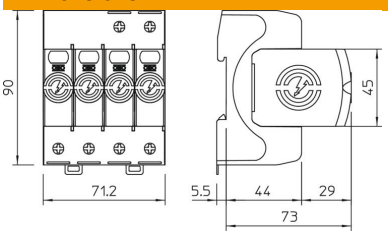

Technical data

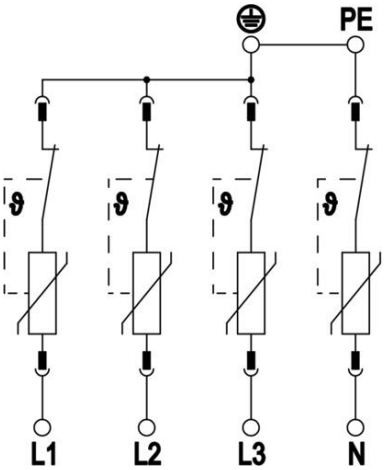

Arrester surge current (8/20 µs) [total]	160 kA
Connection cross-section (min.)	1.5 mm²
Response time	<25 ns
Response time [L-N]	25 ns
Blow-out	no
Pole version	4
Structural width in division units (division unit, 17.5 mm)	4
Operating temperature, max.	80 °C
Operating temperature, min.	-40 °C
Lightning surge current (10/350 µs)	12.5 kA
Lightning surge current (10/350 µs) [L-N/PE]	12.5 kA
Lightning surge current (10/350)	50 kA
Torque	35 Lbs
Torque	4 Nm
Installation location	Interior
Remote signalling	no
Function/defect display	Visual
Housing material surge protection components	PA UL 94 V-0
Maximum continuous voltage (L-N)	280 V
Maximum continuous voltage AC	280 V
Integrated back-up fuse	no
Short-circuit resistance for max. mains-side overcurrent protection	50 kA eff
Conductor cross-section, flexible (fine-wire), max.	35 mm²
Conductor cross-section, flexible (fine-wire), max.	2 AWG
Conductor cross-section, flexible (fine-wire), min.	16 AWG
Conductor cross-section, flexible (fine-wire), min.	1.5 mm²
Conductor cross-section, rigid (single-wire/multiwire), max.	2 AWG
Conductor cross-section, rigid (single-wire/multiwire), max.	35 mm²
Conductor cross-section, rigid (single-wire/multiwire), min.	16 AWG
Conductor cross-section, rigid (single-wire/multiwire), min.	1.5 mm²

Technical data sheet

Combination arrester V50, 4-pole 280 V

Item number: 5093513

Technical data

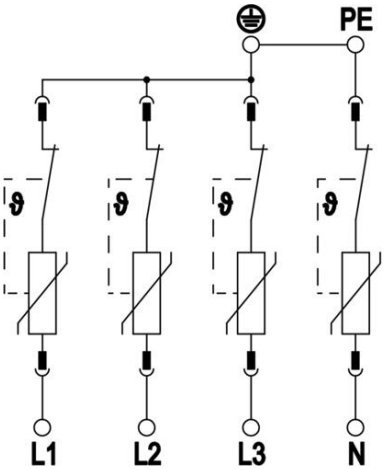

Humidity, min.	5 %
Humidity, max.	95 %
Max. mains-side overcurrent protection	160 A gL/gG
Maximum back-up fuse	160 A
Maximum discharge current (8/20 µs)	50 kA
Maximum discharge current (8/20 µs) [L-N]	50 kA
Minimum distance	1.5 mm
Installation type	DIN rail 35 mm
Nominal discharge current (8/20 µs)	30 kA
Nominal discharge current (8/20 µs) [L-N]	30 kA
Nominal frequency	50 Hz
Nominal voltage AC (50/60 Hz)	230 V
Nominal voltage DC	350 V
Network form	TN-S
TN network form	yes
TN-C-S network form	yes
TN-S network form	yes
TT network form	no
Pole number	4
Ports	One-Port SPD
Residual voltage [L-N] @ 1 kA	0.7 kV
Residual voltage [L-N] @ 12.5 kA	1 kV
Residual voltage [L-N] @ 5 kA	0.8 kV
Residual voltage [L-N] @ 7 kA	0.9 kV
ROHS-conformant	yes
Protection rating	IP20
Protective conductor current	< 100 µA
Protection level	≤1,3 kV
Protection level [L-N]	≤1,3
Signalling on device	Visual
SPD to EN 61643-11	Type 1+2
SPD to IEC 61643-11	Class I+II
SPD to UL 1449	Type 4
Permitted temperature range, max.	80 °C
Permitted temperature range, min.	-40 °C
TOV voltage [L-N] – fail safe mode – 120 min.	440 V
TOV voltage [L-N] – withstand mode – 5 s	335 V
Approvals	VDE KEMA UL ÖVE