Technical data sheet

Combination arrester V50, 3-pole with FS 385 V

Item number: 5093580

Lightning current combination arrester, type 1+2

• For lightning current equipotential bonding to VDE 0185-305 (IEC 62305)
• Lightning current arresting capacity of 12.5 kA (10/350) per pole and up to 50 kA (10/350) in total
• Modular, plug-in arrester with cut-off unit and visual status display
• Locking mechanism with vibration protection and voltage keying
• Plastic to UL 94 V-0
• The remote signalling (FS) variants have a potential-free changeover contact for remote signalling

Application: Lightning current equipotential bonding for buildings of class III and IV.
* Complete = Plug-in arrester and base

LPZ 0→2 | Type 1+2 | FS

PA Polyamide

Master data

Item number	5093580
Type	V50-3+FS-385
Description 1	CombiController V50
Description 2	3-pole with RS
Manufacturer	OBO
Dimension	385V
Material	Polyamide
Smallest sales unit	1
Unit of quantity	Piece
Weight	52.6 kg
Weight unit	kg/100 pc.
CO2 Footprint (GWP) Cradle-to-Gate	1,6552 kg CO2e / 1 Piece

Technical data sheet

Combination arrester V50, 3-pole with FS 385 V

Item number: 5093580

Dimensions

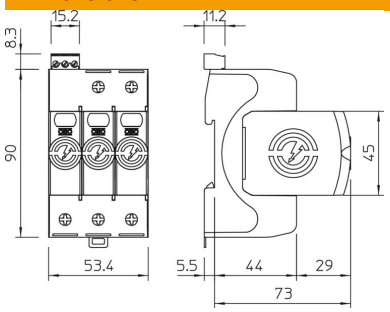

Technical data

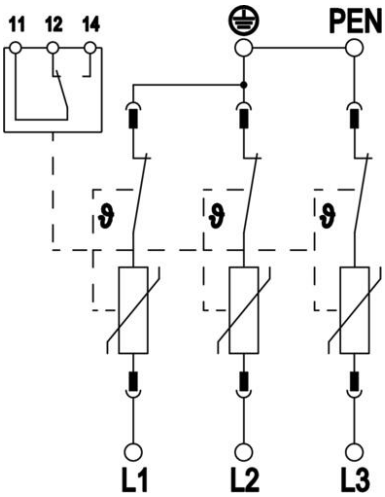

Arrester surge current (8/20 µs) [total]	120 kA
Connection cross-section (min.)	1.5 mm²
Connection cross-section, FM terminals, max.	16 AWG
Connection cross-section, FM terminals, max.	1.5 mm²
Connection cross-section, FM terminals, min.	21 AWG
Connection cross-section, FM terminals, min.	0.5 mm²
Response time	<25 ns
Response time [L-N]	25 ns
Blow-out	no
Pole version	3
Structural width in division units (division unit, 17.5 mm)	3
Operating temperature, max.	80 °C
Operating temperature, min.	-40 °C
Lightning surge current (10/350 µs)	12.5 kA
Lightning surge current (10/350 µs) [L-N/PE]	12.5 kA
Lightning surge current (10/350)	37.5 kA
Torque	35 Lbs
Torque	4 Nm
Torque for FM terminal	1.7 Lbs
Torque for FM terminal	0.2 Nm
Installation location	Interior
Remote signalling	yes
FM contacts	Changeover
Function/defect display	Visual
Housing material surge protection components	PA UL 94 V-0
Maximum continuous voltage (L-N)	385 V
Maximum continuous voltage AC	385 V
Integrated back-up fuse	no
Short-circuit resistance for max. mains-side overcurrent protection	50 kA eff

Technical data sheet

Combination arrester V50, 3-pole with FS 385 V

Item number: 5093580

Technical data

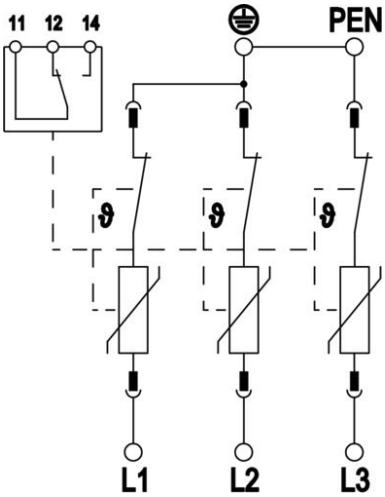

Conductor cross-section, flexible (fine-wire), max.	35 mm²
Conductor cross-section, flexible (fine-wire), max.	2 AWG
Conductor cross-section, flexible (fine-wire), min.	16 AWG
Conductor cross-section, flexible (fine-wire), min.	1.5 mm²
Conductor cross-section, rigid (single-wire/multiwire), max.	2 AWG
Conductor cross-section, rigid (single-wire/multiwire), max.	35 mm²
Conductor cross-section, rigid (single-wire/multiwire), min.	16 AWG
Conductor cross-section, rigid (single-wire/multiwire), min.	1.5 mm²
Humidity, min.	5 %
Humidity, max.	95 %
Max. mains-side overcurrent protection	160 A gL/gG
Maximum back-up fuse	160 A
Maximum discharge current (8/20 µs)	50 kA
Maximum discharge current (8/20 µs) [L-N]	50 kA
Minimum distance	1.5 mm
Installation type	DIN rail 35 mm
Nominal discharge current (8/20 µs)	30 kA
Nominal discharge current (8/20 µs) [L-N]	30 kA
Nominal frequency	50 Hz
Nominal voltage AC (50/60 Hz)	350 V
Network form	TN-C
TN network form	yes
TN-C network form	yes
Pole number	3
Ports	One-Port SPD
Residual voltage [L-N] @ 1 kA	1.1 kV
Residual voltage [L-N] @ 12.5 kA	1.3 kV
Residual voltage [L-N] @ 5 kA	1.2 kV
Residual voltage [L-N] @ 7 kA	1.2 kV
ROHS-conformant	yes
Switching power AC	230 V; 0,5 A
Switching power DC	230 V; 0,1 A / 75 V; 0,5 A
Protection rating	IP20
Protective conductor current	< 100 µA
Protection level	≤1,7 kV
Protection level [L-N]	≤1,7
Signalling on device	Visual
SPD to EN 61643-11	Type 1+2
SPD to IEC 61643-11	Class I+II
SPD to UL 1449	Type 4
Permitted temperature range, max.	80 °C

Technical data

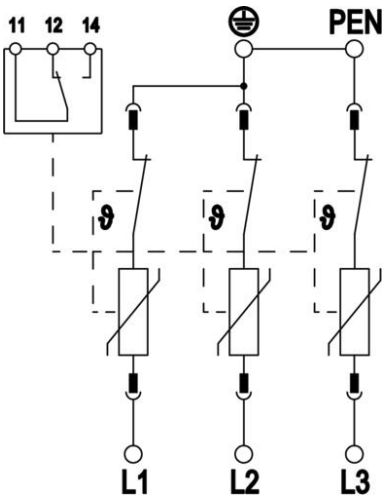

Permitted temperature range, min.	-40 °C
TOV voltage [L-N] – fail safe mode – 120 min.	670 V
TOV voltage [L-N] – withstand mode – 5 s	510 V
Approvals	VDE KEMA UL ÖVE