Technical data sheet

V20 surge arrester, leakage current-free, 1-pole + NPE + FS

Item number: 5095544

Surge arrester, type 2

• For surge voltage protection equipotential bonding to VDE 0100-443 (IEC 60364-4-44)
• Discharge capacity to 30 kA (8/20) per pole through a high-performance series connection of varistor and spark gap
• Modular connectable arrester with cut-off unit and visual status display
• Locking mechanism with vibration protection and voltage keying
• Plastic to UL 94 V-0
• The remote signalling variants (FS) have a potential-free changeover contact for remote signalling

Application: Equipotential bonding in main and sub-distributions.

Type 2 LPZ 1→2

Master data

Item number	5095544
Type	V20-LCF-1+1+FS-2
Description 1	SurgeController V20
Description 2	leakage current-free 1+1+RS
Manufacturer	OBO
Dimension	280V
Smallest sales unit	1
Unit of quantity	Piece
Weight	30.6 kg
Weight unit	kg/100 pc.
CO2 Footprint (GWP) Cradle-to-Gate	1,2406 kg CO2e / 1 Piece

Technical data sheet

V20 surge arrester, leakage current-free, 1-pole + NPE + FS

Item number: 5095544

Dimensions

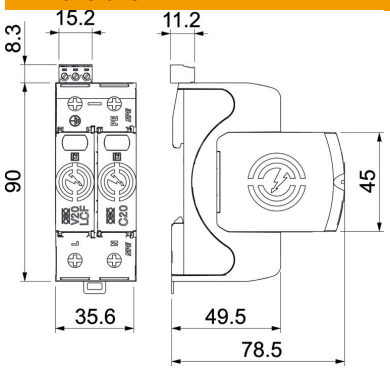

Technical data

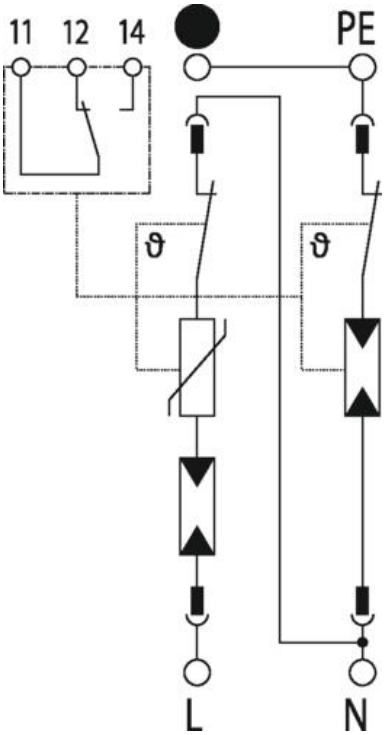

Arrester surge current (8/20 µs) [total]	60 kA
Connection cross-section (min.)	1.5 mm²
Connection cross-section, FM terminals, max.	16 AWG
Connection cross-section, FM terminals, max.	1.5 mm²
Connection cross-section, FM terminals, min.	21 AWG
Connection cross-section, FM terminals, min.	0.5 mm²
Response time [L-N]	100 ns
Response time [N-PE]	100 ns
Blow-out	no
Pole version	1+N/PE
Operating temperature, max.	80 °C
Operating temperature, min.	-40 °C
Torque	35 Lbs
Torque	4 Nm
Torque for FM terminal	1.7 Lbs
Torque for FM terminal	0.2 Nm
Installation location	Interior
Remote signalling	yes
FM contacts	Changeover
Function/defect display	Visual
Housing material surge protection components	PA UL 94 V-0
Maximum continuous voltage (L-N)	280 V
Maximum continuous voltage AC	280 V
Integrated back-up fuse	no
Short-circuit resistant	yes
Short-circuit resistance for max. mains-side overcurrent protection	50 kA eff
Conductor cross-section, flexible (fine-wire), max.	35 mm²
Conductor cross-section, flexible (fine-wire), max.	2 AWG

Technical data sheet

V20 surge arrester, leakage current-free, 1-pole + NPE + FS

Item number: 5095544

Technical data

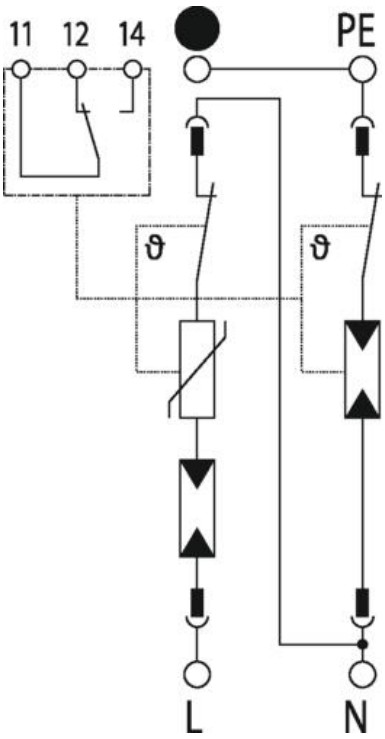

Conductor cross-section, flexible (fine-wire), min.	16 AWG
Conductor cross-section, flexible (fine-wire), min.	1.5 mm²
Conductor cross-section, rigid (single-wire/multiwire), max.	2 AWG
Conductor cross-section, rigid (single-wire/multiwire), max.	35 mm²
Conductor cross-section, rigid (single-wire/multiwire), min.	16 AWG
Conductor cross-section, rigid (single-wire/multiwire), min.	1.5 mm²
Humidity, min.	5 %
Humidity, max.	95 %
Max. mains-side overcurrent protection	160 A gL/gG
Maximum back-up fuse	160 A
Maximum discharge current (8/20 µs)	30 kA
Maximum discharge current (8/20 µs) [L-N]	30 kA
Maximum discharge current (8/20 µs) [N-PE]	60 kA
Minimum distance	1.5 mm
Installation type	DIN rail 35 mm
Nominal discharge current (8/20 µs)	20 kA
Nominal discharge current (8/20 µs) [L-N]	20 kA
Nominal discharge current (8/20 µs) [N-PE]	40 kA
Nominal voltage AC (50/60 Hz)	230 V
DC network form	no
IT network form	no
Other network form	no
TN network form	yes
TN-C network form	yes
TN-C-S network form	yes
TN-S network form	yes
TT network form	no
Ports	One-Port SPD
Test class, type 2	yes
Residual voltage [L-N] @ 1 kA	0.8 kV
Residual voltage [L-N] @ 5 kA	1 kV
ROHS-conformant	yes
Switching power AC	230 V; 0,5 A
Switching power DC	230 V; 0,1 A / 75 V; 0,5 A
Protection rating	IP20
Protective conductor current	< 500 µA
Protection level	≤1,5 kV
Protection level [L-N]	≤1,5
Signalling on device	Visual
SPD to EN 61643-11	Type 2
SPD to IEC 61643-11	Class II
SPD to UL 1449	Type 4

Technical data

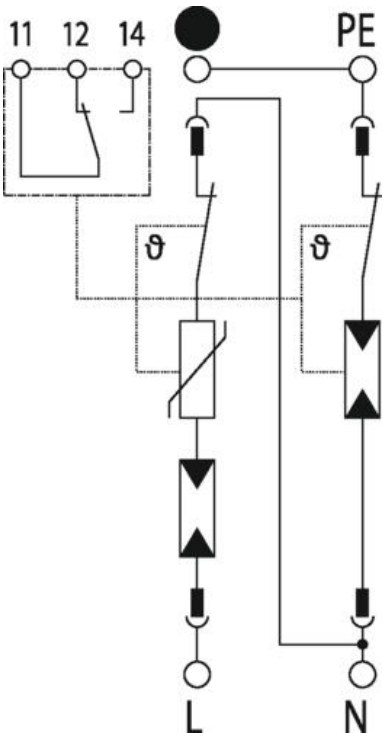

Permitted temperature range, max.	80 °C
Permitted temperature range, min.	-40 °C
TOV voltage [L-N] – fail safe mode – 120 min.	440 V
TOV voltage [L-N] – withstand mode – 5 s	335 V
TOV voltage [N-PE] – withstand mode – 200 ms	1200 V