Technical data sheet

Cap nut cable gland, EMC, metric thread, nickel-plated

Item number: 2086227

With metric connecting thread to IEC 423, robust EMV cap-nut cable gland with large sealing area. Strain relief, wringing protection and tightness over the whole clamping area. Neoprene sealing ring. Polyamide terminal insert. With pre-mounted O sealing ring on connection thread, VDE-tested to DIN EN 50262, protection rating IP 68 at 5 bar for 1 hr.

* Prices according to DEL notation.

IP 68 M

CuZn 37 Brass

N Nickel-plated

Master data

Item number	2086227
Type	V-TEC VM50 EMV
Description 1	Cable gland EMV
Description 2	for cable with shielding
Manufacturer	OBO
Dimension	M50
Material	Brass
Surface Surface standard	Nickel-plated
Smallest sales unit	5
Unit of quantity	Piece
Weight	26.165 kg
Weight unit	kg/100 pc.
CO2 Footprint (GWP) Cradle-to-Gate	0,7225 kg CO2e / 1 Piece

Technical data sheet

Cap nut cable gland, EMC, metric thread, nickel-plated

Item number: 2086227

Dimensions

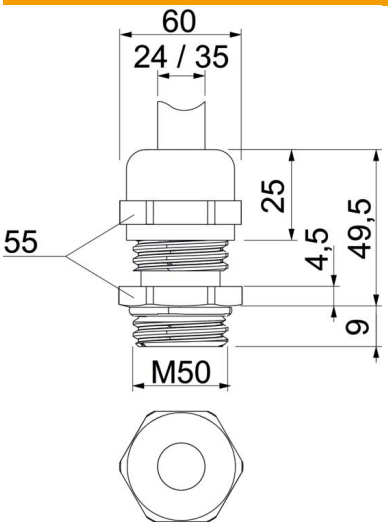

Dimension E	60 mm
Dimension L max.	49.5 mm
Dimension L1	9 mm
Dimension L2	4.5 mm
Dimension L3	25 mm

Technical data

Type of seal	Sealing ring
Version for	Straight
Bend protection	no
Sealing area D, max.	35 mm
Sealing area D, min.	24 mm
Flat cable gland	no
For Ex zone	Without
Thread	M50 x 1,5
Thread type	Metric
Thread length	9 mm
Fibre-glass reinforced	no
Halogen-free	no
Unstable torque	13.5 Nm
Impact category	7
Strain relief category	A
Sealing insert, multiple	no
With locknut	no
ROHS-conformant	Exempt
Impact-resistant	no
WAF	55
Protection rating	IP68
Permitted temperature range, max.	100 °C
Permitted temperature range, min.	-20 °C
Strain relief option	yes