Technical data sheet

US 5 support FT

Item number: 6341608

U support of dimensions 50 x 50 mm with welded head plate.
For fastening to horizontal concrete ceilings and steel girders. For bracket widths of 400 mm or more, or if the bracket is mounted at the end of a suspended support, we recommend the use of the spacer, type DSK 45.

St Steel

FT Hot-dip galvanised

Master data

Item number	6341608
Type	US 5 K 90 FT
Description 1	Support
Description 2	with welded head plate
Manufacturer	OBO
Dimension	50x50x900
Colour	zinc
Material	Steel
Surface	Hot-dip galvanised
Surface standard	DIN EN ISO 1461
Smallest sales unit	1
Unit of quantity	Piece
Weight	256 kg
Weight unit	kg/100 pc.
CO2 Footprint (GWP) Cradle-to-Gate	6,05 kg CO2e / 1 Piece

Technical data sheet

US 5 support FT

Item number: 6341608

Dimensions

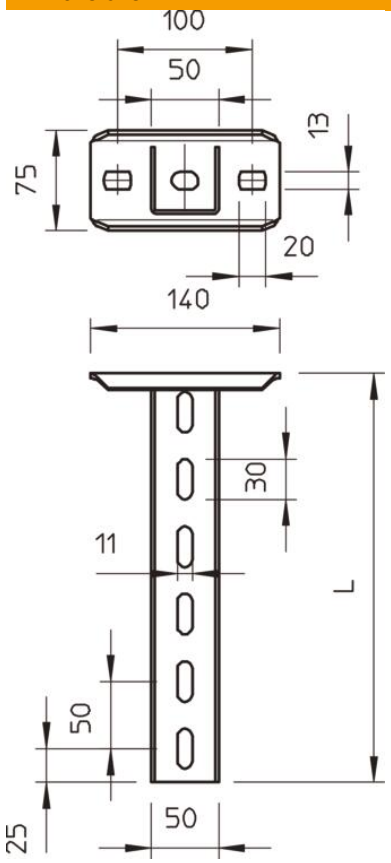

Length	900 mm
Width	50 mm
Height	50 mm
Dimension L	900 mm

Technical data

Version for	U profile
Bracket length 200	5.75 kN
Bracket length 400	3.1 kN
Bracket length 600	2.2 kN
Maintain electrical functions	yes
Material thickness	2.5 mm
Maximum tensile load	10 kN
With toothing	no
ROHS-conformant	yes

Technical data sheet

US 5 support FT

Item number: 6341608

Loads

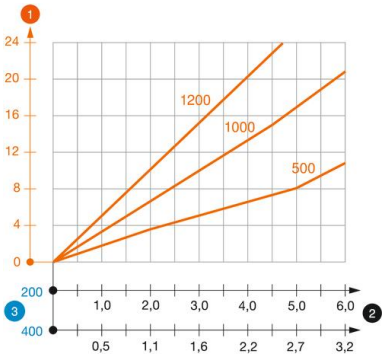

Load diagram, U support, type US 5 K

1. Bending of the end of the suspended support at permitted bracket load
2. Permitted bracket load in kN without man load
3. Bracket length in mm

— Load curves with support lengths in mm

Characteristic anchor load values for US 5 K support

Single-sided load				
	Max. load [kN]			
	Bracket width [mm]			
Anchor type	110%	210	310	410
BZ3 10x90/0-30	4.31	3.18	2.51	2.06
BZ3 12x110/0-35	5.82	4.29	3.39	2.77

Max. total load F = cable weight + cable tray + bracket + suspended support. The tabular values for double-sided loads take the available axis spacing ai = 10 cm into account. The stated values are based on uncracked concrete of compressive strength C20/25. Please comply with the installation conditions of ETA(anchors).