Technical data sheet

UGD250-3 underfloor box for GES9/55

Item number: 7410060

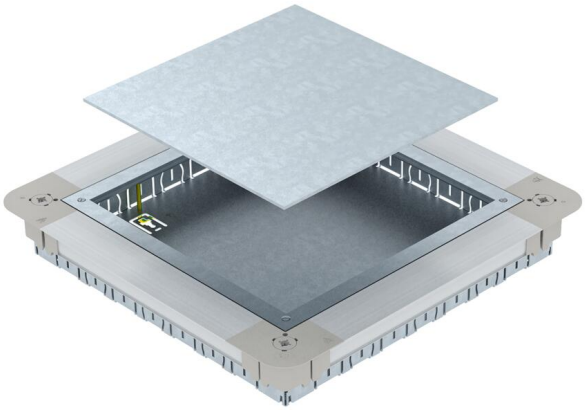

Underfloor accessory box with mounting lid and lid blanking plate with sheet steel side walls. For the installation of a square GES9 55 service outlet in screed heights of 55 mm or more. Height can be infinitely adjusted to the nominal screed height and the screed can be worked flush to the screed scraping edge. With 7 x M20, 3 x M25, 4 x M32 pipe insertion openings on each side. Usable pipe size at a system height of 55 mm: M20.

St	Steel
FS	Strip galvanised

Master data

Item number	7410060
Type	UGD55 250-3 9R
Description 1	Underfloor box empty
Description 2	for GES9/55UV
Manufacturer	OBO
Dimension	367x367x55
Material	Steel
Surface	Strip galvanised
Surface standard	DIN EN 10346
Smallest sales unit	1
Unit of quantity	Piece
Weight	430 kg
Weight unit	kg/100 pc.
CO2 Footprint (GWP) Cradle-to-Gate	25,7284 kg CO2e / 1 Piece

Technical data sheet

UGD250-3 underfloor box for GES9/55

Item number: 7410060

Dimensions

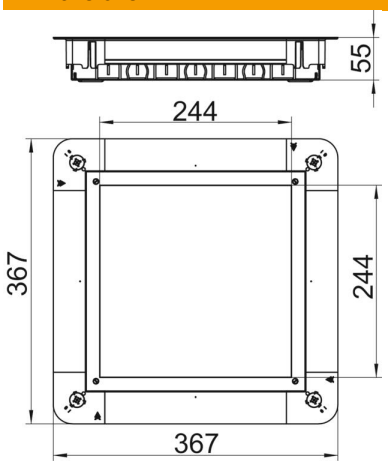

Length	367 mm
Width	367 mm
Height	55 mm
Dimension a	244 mm
Dimension A	367 mm
Dimension B	367 mm
Dimension b	244 mm
Dimension h	55 mm

Technical data

Expansion option	For installation of accessories
Floor plate	yes
Lowerable to be flush-floor	yes
Floor care	Dry
Cover version	Square
Seal installation option	no
Installation opening for on-floor tank	no
Installation opening for flush-mount unit	Square
Decouplable	no
Screed height, max.	80 mm
Screed height, min.	55 mm
For pipe connection	yes
Suitable for screed-flush closed underfloor ducts	no
Suitable for screed-covered underfloor ducts	no
Suitable for underfloor ducts	no
Trunking width, max.	250 mm
Trunking width, min.	190 mm
Nominal size	250 mm
Nominal size for device installation units	9
Height-adjustment range, max.	80 mm
Height-adjustment range, min.	55 mm
ROHS-conformant	Exempt