Technical data sheet

Junction box T 250, closed

Item number: 2007287

Junction box for the connection of cables and lines indoors and in protected outdoor areas. Rectangular design without entries. Suitable for wall and ceiling mounting, on mounting panels and threads in the floor. With the option to fasten inside and to mount via the corner domes. Cover with quick lock, sealable. Made from halogen-free and UV-resistant materials.

Junction box according to DIN EN 60670. Flame-resistant to DIN EN 60695/2/11, test temperature 650 °C. Impact resistance IK05 according to DIN EN 50102.

PP/GF Polypropylene, fibreglass reinforced

Master data

Item number	2007287
Type	T 250 OE
Description 1	Junction box
Description 2	without entries
Manufacturer	OBO
Dimension	240x190x95
Colour	Light grey; RAL 7035
Material	Polypropylene, fibreglass reinforced
Smallest sales unit	1
Unit of quantity	Piece
Weight	48.3 kg
Weight unit	kg/100 pc.
CO2 Footprint (GWP) Cradle-to-Gate	1,8041 kg CO2e / 1 Piece

Technical data sheet

Junction box T 250, closed

Item number: 2007287

Dimensions

Length	240 mm
Width	190 mm
Height	95 mm

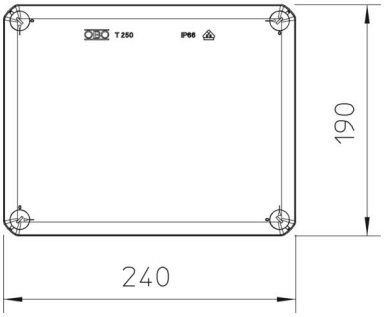

Technical data

Expandable	yes
Type of entry	None
Type of entry	Cable
Type of housing penetration	Without
Measured insulation voltage Vi	500 V
Equipment	Without
Cover	Not transparent
Cover fastening	Screwed
Entry from rear	yes
Entries	None
Explosion-tested version	no
Flame-resistant	Acc. to VDE 0471/DIN 695 Part 2-1, test temperature 750°C
Shape	Rectangular
Maintain electrical functions	Without
For Ex zone	Without
For Ex zone gas	Without
For Ex zone dust	Without
Fibre-glass reinforced	yes
Halogen-free	yes
Clear internal dimensions	225x173x86 mm
With screening	no
with lid	yes
Mounting type	Wall/ceiling mounting
Nominal cross-section, min.	25 mm²
Nominal voltage	500 V
Sealable	yes
ROHS-conformant	yes
Protection rating	IP66
Protection rating IK code	IK05.
Permitted temperature range, max.	65 °C

Technical data

Permitted temperature range, min.	-25 °C
Transparent lid	no
Weatherproof	no