# Technical data sheet

## Junction box T 100, plug-in seal

## Item number: 2007533

Junction box for the connection of cables and lines indoors and in protected outdoor areas. Rectangular design with plug-in seals to the sides and knock-out entries in the bottom. Suitable for wall and ceiling mounting and on mounting panels. With the option to fasten inside and to mount via the corner domes. Cover with quick lock, sealable. Made from halogen-free and UV-resistant materials.

Junction box according to DIN EN 60670. Flame-resistant to DIN EN 60695/2/11, test temperature 650 °C. Impact resistance IK07 according to DIN EN 50102.

PP Polypropylene

### Master data

| | |
|---|---|
| Item number | 2007533 |
| Type | T 100 RW |
| Description 1 | Junction box |
| Description 2 | with entries |
| Manufacturer | OBO |
| Dimension | 150x116x67 |
| Colour | Pure white; RAL 9010 |
| Material | Polypropylene |
| Smallest sales unit | 1 |
| Unit of quantity | Piece |
| Weight | 16.27 kg |
| Weight unit | kg/100 pc. |
| CO2 Footprint (GWP) Cradle-to-Gate | 0,6945 kg CO2e / 1 Piece |

# Technical data sheet

## Junction box T 100, plug-in seal

## Item number: 2007533

### Dimensions

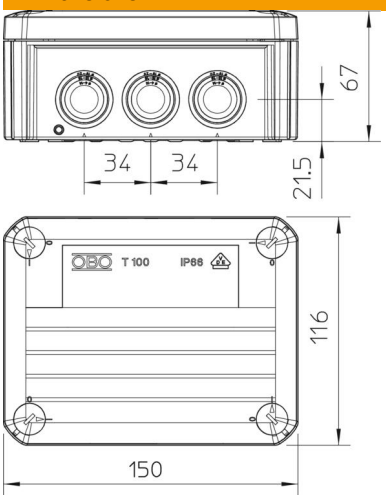


| | |
|---|---|
| Length | 150 mm |
| Width | 116 mm |
| Height | 67 mm |

### Technical data

| | |
|---|---|
| Expandable | yes |
| No. of entries | 10 |
| Type of entry | Plug-in seal |
| Type of entry | Cable |
| Type of housing penetration | Cuttable stepped membrane |
| Measured insulation voltage Vi | 500 V |
| Equipment | Without |
| Cover | Not transparent |
| Cover fastening | Screwed |
| Entry from rear | yes |
| Entries | 10 x M25 |
| Explosion-tested version | no |
| Flame-resistant | acc. to VDE 0471/DIN 695 Part 2-1, test temperature 650°C |
| Shape | Rectangular |
| Maintain electrical functions | Without |
| For Ex zone | Without |
| For Ex zone gas | Without |
| For Ex zone dust | Without |
| Fibre-glass reinforced | no |
| Halogen-free | yes |
| Clear internal dimensions | 136x102x57 mm |
| With screening | no |
| with lid | yes |
| Mounting type | Wall/ceiling mounting |
| Nominal cross-section, min. | 10 mm² |
| Nominal voltage | 500 V |
| Sealable | yes |
| ROHS-conformant | yes |
| Protection rating | IP66 |
| Protection rating IK code | IK07. |

### Technical data

| | |
|---|---|
| Permitted temperature range, max. | 65 °C |
| Permitted temperature range, min. | -25 °C |
| Transparent lid | no |
| Weatherproof | no |