Technical data sheet

TP support / wall and support bracket FS

Item number: 6366023

TP bracket with clamping lugs for screwless mesh cable tray fastening.
If the bracket is fastened directly to the wall or the profiles are screwed together, then, for reasons of stability, always use the spacer, type DS 4.
Mesh cable trays with a 50 x 100 mm grid width, e.g. type GRL, GR and GRM, can be fastened to the TP bracket without screws.

St	Steel
FS	Strip galvanised

Master data

Item number	6366023
Type	TPSAG 195 FS
Description 1	TP wall and support bracket
Description 2	for mesh cable tray
Manufacturer	OBO
Dimension	B195mm
Colour	zinc
Material	Steel
Surface	Strip galvanised
Surface standard	DIN EN 10346
Smallest sales unit	1
Unit of quantity	Piece
Weight	41 kg
Weight unit	kg/100 pc.
CO2 Footprint (GWP) Cradle-to-Gate	0,9246 kg CO2e / 1 Piece

Technical data sheet

TP support / wall and support bracket FS

Item number: 6366023

Dimensions

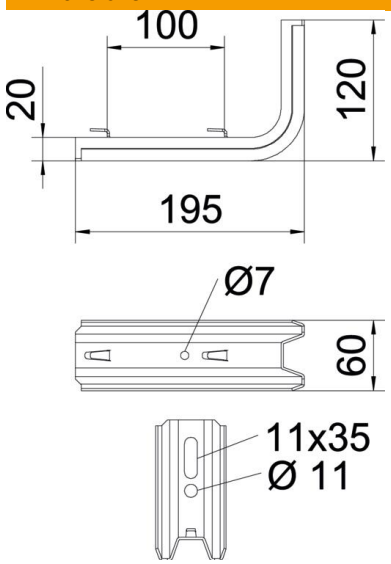

Length	195 mm
Width	60 mm
Height	120 mm
Dimension B	60 mm
Dimension H	120 mm
Dimension L	195 mm
Dimension W	100 mm

Technical data

Version for	Wall and support bracket
F in kN	1 kN
Maintain electrical functions	no
for width max.	150 mm
for width min.	150
ROHS-conformant	yes
Rustproof steel, pickled	no

Loads

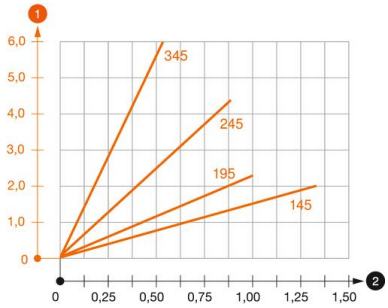

Load diagram, bracket, type TPSAG

1. Bending of the bracket tip at permitted bracket load
2. Permitted bracket load in kN without man load
2. Support width in m

Characteristic anchor load values for TP bracket

Wall fastening				
	Max. load [kN]			
	Bracket width [mm]			
Anchor type	145	195	245	345
BZ3 10x90/0-30	1.3	0.93	0.60	0.55

The load capacity values increase considerably when used in uncracked concrete. The stated values are based on cracked concrete of compressive strength C20/25. Please comply with the installation conditions of ETA(anchors).