# Technical data sheet

## Closed FireBox T250, empty

## Item number: 7205784

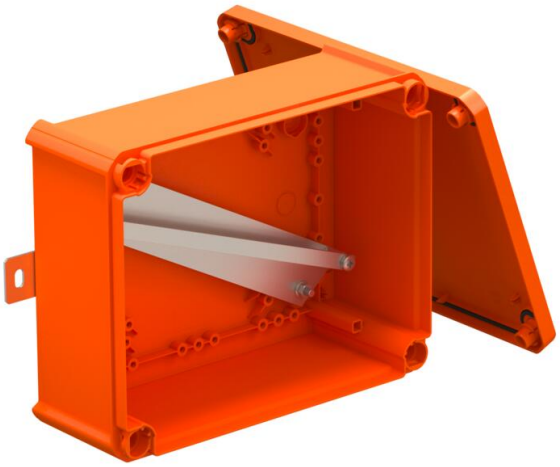

Unequipped, closed connection or junction box for free termination with ceramic terminals and cable glands. Dimension A states the available support rail length for the wiring terminals. Sufficiently large wiring compartment through diagonally arranged support rail. Fastening on easily accessible external flaps made of stainless steel A2 (1.4301). Approved for cable systems that maintain the electrical function according to DIN 4102 Part 12 with the classes E30, E60 and E90.

E30 E60 E90 IP 66

PP Polypropylene

### Master data

| | |
|---|---|
| Item number | 7205784 |
| Type | T250E 0VA |
| Description 1 | Junction box |
| Description 2 | for function maintenance |
| Manufacturer | OBO |
| Dimension | 240x190x95 |
| Colour | Pastel orange; RAL 2003 |
| Material | Polypropylene |
| Smallest sales unit | 1 |
| Unit of quantity | Piece |
| Weight | 74.084 kg |
| Weight unit | kg/100 pc. |
| CO2 Footprint (GWP) Cradle-to-Gate | 4,7475 kg CO2e / 1 Piece |

# Technical data sheet

## Closed FireBox T250, empty

## Item number: 7205784

### Dimensions

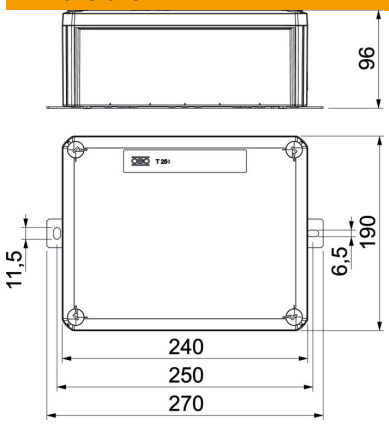


| | |
|---|---|
| Length | 240 mm |
| Width | 190 mm |
| Height | 95 mm |
| Dimension A | 286 mm |
| Dimension B | 190 mm |
| Dimension H | 95 mm |
| Dimension L | 240 mm |
| Dimension L1 | 250 mm |
| Dimension L2 | 270 mm |

### Technical data

| | |
|---|---|
| Equipment | Support rail |
| Cover | Not transparent |
| Cover fastening | Screwed |
| Entry from rear | no |
| Maintain electrical functions | E 90 |
| Halogen-free | yes |
| Clear internal dimensions | 225x173x86 mm |
| With screening | no |
| with lid | yes |
| Nominal cross-section, max. | 16 mm² |
| Nominal cross-section, min. | 0.5 mm² |
| Sealable | no |
| ROHS-conformant | yes |
| Protection rating | IP66 |