# Technical data sheet

## FireBox T160 with plug-in seals, 1 fuse holder

## Item number: 7205754

Junction box with one fuse holder and soft plug-in seals. Sufficiently large wiring compartment through diagonally arranged connection unit with completely pre-mounted, high-temperature-resistant ceramic terminals. Green-yellow labelled protective conductor terminal. Fastening on easily accessible external flaps. Approved for cable systems that maintain the electrical function according to DIN 4102 Part 12 with the classes E30, E60 and E90. Ceramic clamps have been tested according to DIN EN 60998-2-1:2004.

Including 2 x MMSplus P 6x35 screw ties.

E30 E60 E90 IP 66

PP Polypropylene

### Master data

| | |
|---|---|
| Item number | 7205754 |
| Type | T160ED 10AF |
| Description 1 | Junction box |
| Description 2 | for function maintenance |
| Manufacturer | OBO |
| Dimension | 190x150x77 |
| Colour | Pastel orange; RAL 2003 |
| Material | Polypropylene |
| Smallest sales unit | 1 |
| Unit of quantity | Piece |
| Weight | 70.513 kg |
| Weight unit | kg/100 pc. |
| CO2 Footprint (GWP) Cradle-to-Gate | 2,4604 kg CO2e / 1 Piece |

# Technical data sheet

## FireBox T160 with plug-in seals, 1 fuse holder

## Item number: 7205754

### Dimensions

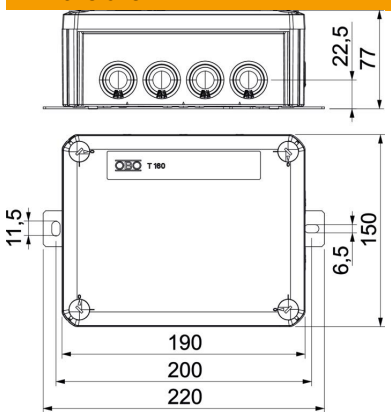


| | |
|---|---|
| Length | 190 mm |
| Width | 150 mm |
| Height | 77 mm |
| Dimension B | 150 mm |
| Dimension H | 77 mm |
| Dimension L | 190 mm |
| Dimension L1 | 200 mm |
| Dimension L2 | 220 mm |

### Technical data

| | |
|---|---|
| Expandable | no |
| No. of entries | 12 |
| Number of terminals | 6 |
| Type of housing penetration | Cuttable stepped membrane |
| Measured insulation voltage Vi | 690 V |
| Equipment | Terminal |
| Cover | Not transparent |
| Cover fastening | Screwed |
| Entry from rear | no |
| Entries | 7x M25<br><br>5x M32 |
| Explosion-tested version | no |
| Shape | Rectangular |
| Maintain electrical functions | E 90 |
| For Ex zone | Without |
| For Ex zone gas | Without |
| For Ex zone dust | Without |
| Halogen-free | yes |
| Clear internal dimensions | 176x135x67 mm |
| With screening | no |
| with lid | yes |
| Nominal cross-section, max. | 10 mm² |
| Nominal cross-section, min. | 4 mm² |
| Nominal voltage | 660 V |
| Sealable | no |
| ROHS-conformant | Exempt |
| Impact-resistant | no |
| Protection rating | IP66 |
| Transparent lid | no |
| Weatherproof | no |