Technical data sheet

FireBox T160 with plug-in seals, double terminals

Item number: 7205748

Junction box with ceramic double terminals and soft plug-in seals. Sufficiently large wiring compartment through diagonally arranged connection unit with completely pre-mounted, high-temperature-resistant ceramic terminals. Green-yellow labelled protective conductor terminal. Fastening on easily accessible external flaps. Approved for cable systems that maintain the electrical function according to DIN 4102 Part 12 with the classes E30, E60 and E90. Ceramic clamps have been tested according to DIN EN 60998-2-1:2004.

Including 2 x MMSplus P 6x35 screw ties.

E30 E60 E90 IP 66

PP Polypropylene

Master data

Item number	7205748
Type	T160ED 10-2A
Description 1	Junction box
Description 2	for function maintenance
Manufacturer	OBO
Dimension	190x150x77
Colour	Pastel orange; RAL 2003
Material	Polypropylene
Smallest sales unit	1
Unit of quantity	Piece
Weight	71.998 kg
Weight unit	kg/100 pc.
CO2 Footprint (GWP) Cradle-to-Gate	2,3953 kg CO2e / 1 Piece

Technical data sheet

FireBox T160 with plug-in seals, double terminals

Item number: 7205748

Dimensions

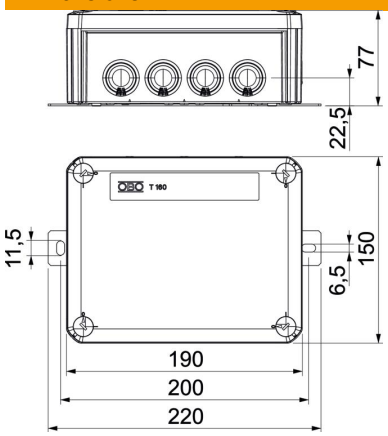

Length	190 mm
Width	150 mm
Height	77 mm
Dimension B	150 mm
Dimension H	77 mm
Dimension L	190 mm
Dimension L1	200 mm
Dimension L2	220 mm

Technical data

Expandable	no
No. of entries	12
Number of terminals	5
Type of housing penetration	Cuttable stepped membrane
Measured insulation voltage Vi	690 V
Equipment	Terminal
Cover	Not transparent
Cover fastening	Screwed
Entry from rear	no
Entries	7x M25 5x M32
Explosion-tested version	no
Shape	Rectangular
Maintain electrical functions	E 90
For Ex zone	Without
For Ex zone gas	Without
For Ex zone dust	Without
Halogen-free	yes
Clear internal dimensions	176x135x67 mm
With screening	no
with lid	yes
Nominal cross-section, max.	10 mm²
Nominal cross-section, min.	4 mm²
Nominal voltage	660 V
Sealable	no
ROHS-conformant	Exempt
Impact-resistant	no
Protection rating	IP66
Transparent lid	no
Weatherproof	no