Technical data sheet

Closed FireBox T100, empty

Item number: 7205780

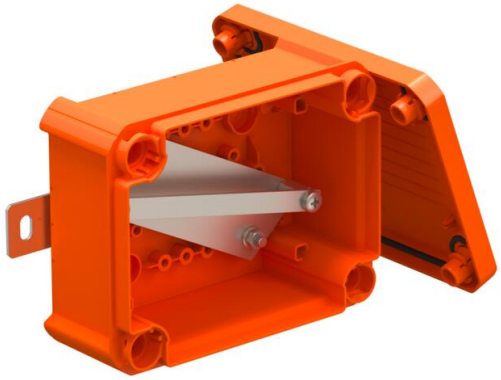

Unequipped, closed connection or junction box for free termination with ceramic terminals and cable glands. Dimension A states the available support rail length for the wiring terminals. Sufficiently large wiring compartment through diagonally arranged support rail. Fastening on easily accessible external flaps made of stainless steel A2 (1.4301). Approved for cable systems that maintain the electrical function according to DIN 4102 Part 12 with the classes E30, E60 and E90.

E30 E60 E90 IP 66

PP Polypropylene

Master data

Item number	7205780
Type	T100E 0VA
Description 1	Junction box
Description 2	for function maintenance
Manufacturer	OBO
Dimension	150x116x67
Colour	Pastel orange; RAL 2003
Material	Polypropylene
Smallest sales unit	1
Unit of quantity	Piece
Weight	33.89 kg
Weight unit	kg/100 pc.
CO2 Footprint (GWP) Cradle-to-Gate	2,3617 kg CO2e / 1 Piece

Technical data sheet

Closed FireBox T100, empty

Item number: 7205780

Dimensions

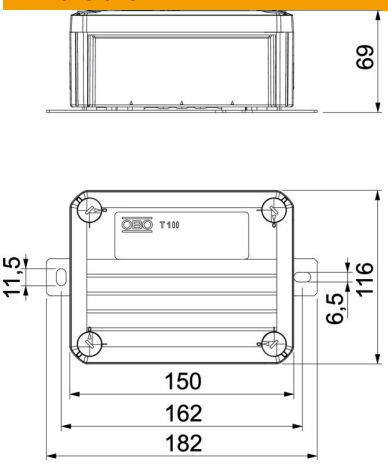

Length	150 mm
Width	116 mm
Height	67 mm
Dimension A	101 mm
Dimension B	116 mm
Dimension H	67 mm
Dimension L	150 mm
Dimension L1	162 mm
Dimension L2	182 mm

Technical data

Equipment	Support rail
Cover	Not transparent
Cover fastening	Screwed
Entry from rear	no
Maintain electrical functions	E 90
Halogen-free	yes
Clear internal dimensions	136x102x57 mm
With screening	no
with lid	yes
Nominal cross-section, max.	6 mm²
Nominal cross-section, min.	0.5 mm²
Sealable	no
ROHS-conformant	yes
Protection rating	IP66