Technical data sheet

FireBox T100, with plug-in seals, for data technology, 4x8

Item number: 7205766

Connection box for data technology with soft plug-in seals. Pairs of high-temperature-resistant ceramic terminals, suitable for data cables. Green-yellow labelled protective conductor/shield terminal. Fastening on easily accessible external flaps. Approved for cable systems that maintain the electrical function according to DIN 4102 Part 12 with the classes E30, E60 and E90. Ceramic clamps have been tested according to DIN EN 60998-2-1:2004.

Including 2x MMSplus P 6x35 screw ties.

E30 E60 E90 IP 66

PP Polypropylene

Master data

Item number	7205766
Type	T100ED 4x8AD
Description 1	Junction box
Description 2	for function maintenance
Manufacturer	OBO
Dimension	150x116x67
Colour	Pastel orange; RAL 2003
Material	Polypropylene
Smallest sales unit	1
Unit of quantity	Piece
Weight	45.21 kg
Weight unit	kg/100 pc.
CO2 Footprint (GWP) Cradle-to-Gate	1,715 kg CO2e / 1 Piece

Technical data sheet

FireBox T100, with plug-in seals, for data technology, 4x8

Item number: 7205766

Dimensions

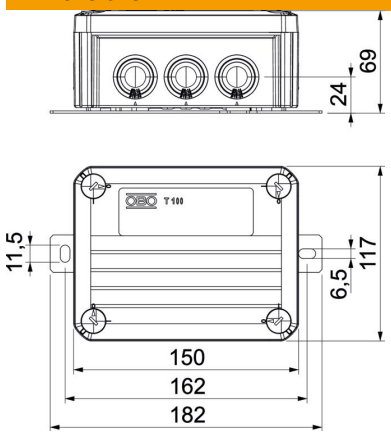

Length	150 mm
Width	116 mm
Height	68 mm
Dimension B	116 mm
Dimension H	68 mm
Dimension L	150 mm
Dimension L1	162 mm
Dimension L2	182 mm

Technical data

Expandable	no
No. of entries	10
Number of terminals	9
Type of housing penetration	Cuttable stepped membrane
Equipment	Terminal
Cover	Not transparent
Cover fastening	Screwed
Entry from rear	no
Entries	8 x M25 2 x M32
Explosion-tested version	no
Shape	Rectangular
Maintain electrical functions	E 90
For Ex zone	Without
For Ex zone gas	Without
For Ex zone dust	Without
Halogen-free	yes
Clear internal dimensions	136x102x57 mm
With screening	no
with lid	yes
Nominal cross-section, max.	4 mm²
Nominal cross-section, min.	0.5 mm²
Nominal voltage	660 V
Sealable	no
ROHS-conformant	Exempt
Impact-resistant	no
Protection rating	IP66
Transparent lid	no
Weatherproof	no