# Technical data sheet

## 0° socket, protective contact, triple

## Item number: 6119765

Protective contact socket, triple 0°, with increased touch protection, with screwless terminals, 2-pin, 16 A, 250 V~, with connection terminals according to IEC 60884-1.

Polycarbonate Eco

Matt

### Master data

| | |
|---|---|
| Item number | 6119765 |
| Type | STD-D0N AL3 |
| Description 1 | Socket 0°, triple |
| Description 2 | protective contact |
| Manufacturer | OBO |
| Dimension | 135x45x42 |
| Colour | Aluminium painted |
| Material | Polycarbonate Eco |
| Surface | Matt |
| Surface standard | |
| Smallest sales unit | 1 |
| Unit of quantity | Piece |
| Weight | 9.5 kg |
| Weight unit | kg/100 pc. |

# Technical data sheet

## 0° socket, protective contact, triple

## Item number: 6119765

### Dimensions

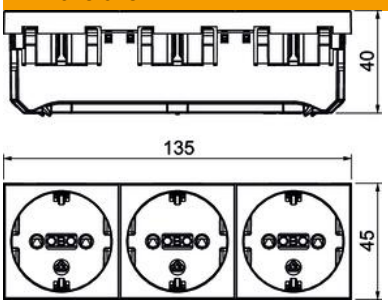


| | |
|---|---|
| Width | 135 mm |
| Height | 45 mm |

### Technical data

| | |
|---|---|
| Cover | Central plate |
| Closable | no |
| Connection type | Screwless terminal |
| Number of units | 3 |
| Number of modules (for modular construction) | 0 |
| Number of switchable sockets | 0 |
| Number of poles | 2 |
| Printed label/coding | Without printing |
| Version for | Triple 0° |
| Surface version | Matt |
| Version for | SCHUKO |
| Ejection mechanism | no |
| Fastening type | Lock |
| Labelling panel | no |
| Operating temperature, max. | 40 °C |
| Operating temperature, min. | -5 °C |
| increased touch protection | yes |
| Error current protection | no |
| For more difficult conditions (according to VDE) | no |
| Power reserve | no |
| Halogen-free | yes |
| Insulated installation | no |
| Hinged cover | no |
| Coding | no |
| Warning light | no |
| With on/off switch | no |
| With fine-wire fuse | no |
| With functional lighting | no |
| With orientation lighting | no |
| Mounting type | Device installation duct |
| Nominal voltage | 250 V |
| Nominal current | 16 A |
| ROHS-conformant | yes |
| Protection rating | Other |
| Special power supply | Without special power supply |
| Socket version | Protective contact |
| Socket angle | 0° |

### Technical data

| | |
|---|---|
| Transparent | no |
| Rotated central insert | no |
| Surge protection | no |