Technical data sheet

Terrazzo lined body for height-adjustable cassettes, nominal size R9
Item number: 7404376

Lined body, suitable for polishing, for the direct and jointless installation of round height-adjustable cassettes, nominal size 9, into surface-finished screeds/ terrazzo floorings. The lining is laid floating onto underfloor boxes with mounting lids of nominal size 9, closing the gaps between underfloor box and cassette frame. The protection cover made from aluminium sheet is put into the cassette frame as a dummy before the screed work is done and can be polished over with the screed or terrazzo.

A2 Stainless steel

Master data

Item number	7404376
Type	SK RKR9
Description 1	Shuttering unit for cassettes
Description 2	for polished screeds
Manufacturer	OBO
Material	Stainless steel 1.4301
Smallest sales unit	1
Unit of quantity	Piece
Weight	220 kg
Weight unit	kg/100 pc.
CO2 Footprint (GWP) Cradle-to-Gate	18,6251 kg CO2e / 1 Piece

Technical data sheet

Terrazzo lined body for height-adjustable cassettes, nominal size R9
Item number: 7404376

Dimensions

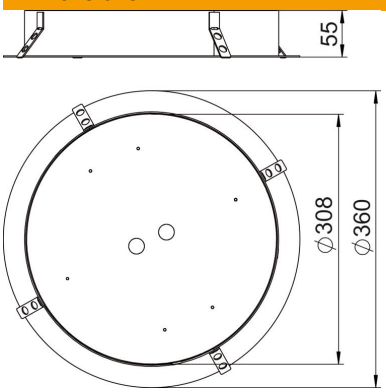

Height	55 mm
Dimension D	360 mm
Dimension d	308 mm
Dimension h	55 mm

Technical data

Shape	Round
Floor height, max.	200 mm
Floor height, min.	130 mm
Nominal size for device installation units	R9
ROHS-conformant	yes