Technical data sheet

Hot-dip galvanised steel bend, without thread

Item number: 2046819

90° bend with moulded sleeves, for electrical installation pipes according to EN 61386-1. With burr-free inner wall.

E30 E90

St Steel

FT Hot-dip galvanised

Master data

Item number	2046819
Type	SBN32 FT
Description 1	Conduit plug-in bend
Description 2	without thread
Manufacturer	OBO
Dimension	Ø32mm
Material	Steel
Surface	Hot-dip galvanised
Surface standard	DIN EN ISO 1461
Smallest sales unit	20
Unit of quantity	Piece
Weight	41 kg
Weight unit	kg/100 pc.
CO2 Footprint (GWP) Cradle-to-Gate	1,4384 kg CO2e / 1 Piece

Technical data sheet

Hot-dip galvanised steel bend, without thread

Item number: 2046819

Dimensions

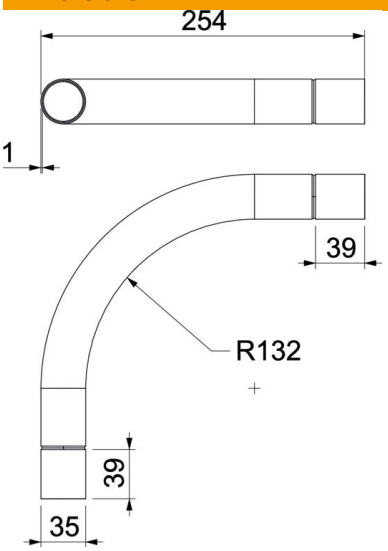

Dimension A	86.5 mm
Dimension B	254 mm
Dimension D	35.1 mm
Dimension d	32.7 mm
Dimension l	40 mm
Dimension m (mm)	M32
Dimension R	150 mm
Dimension t	1.2 mm

Technical data

Version for	Connector
Flexible	no
For nominal pipe diameter	32 mm
Halogen-free	no
With inspection opening and lid	no
With sleeve	yes
Brushed surface	no
Polished surface	no
ROHS-conformant	yes
Permitted temperature range, max.	400 °C
Permitted temperature range, min.	-45 °C
Angle of the bend	90 °
Two-part	no