Technical data sheet

Straight connector A4

Item number: 6067675

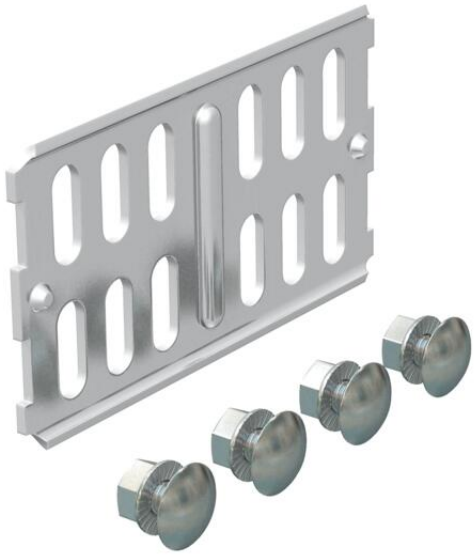

Straight connector for straight connection of cable trays and fittings with a side height of 60 mm.

Including appropriate fastening material.

A4 Stainless steel

2B Bright, treated

Master data

Item number	6067675
Type	RLVK 60 A4
Description 1	Straight connector
Description 2	for cable tray
Manufacturer	OBO
Dimension	60x100
Colour	stainless steel
Material	Stainless steel 1.4571
Surface	Bright, treated
Surface standard	
Smallest sales unit	10
Unit of quantity	Piece
Weight	9.78 kg
Weight unit	kg/100 pc.
CO2 Footprint (GWP) Cradle-to-Gate	0,5951 kg CO2e / 1 Piece

Technical data sheet

Straight connector A4

Item number: 6067675

Dimensions

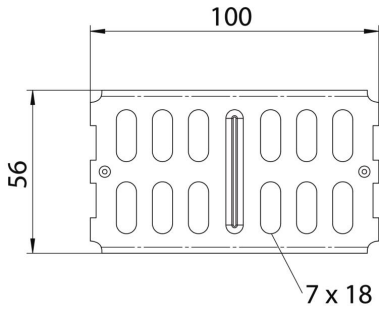

Dimension	100 x 56
Length	100 mm
Width	3.5 mm
Height	56 mm
Height	2 in
Plate thickness	2 mm

Technical data

Version for	Straight connector
Maintain electrical functions	no
Suitable for mesh cable tray	no
Suitable for cable ladder	no
Suitable for cable tray	yes
Suitable for cable tray system height	60 mm
Adjustable connector, horizontal	no
Articulated connector, vertical	no
ROHS-conformant	yes
Rustproof steel, pickled	no
Connection type	Screw connector