Technical data sheet

Height-adjustable cassette for tube body, RKFN, stainless steel

Item number: 7408980

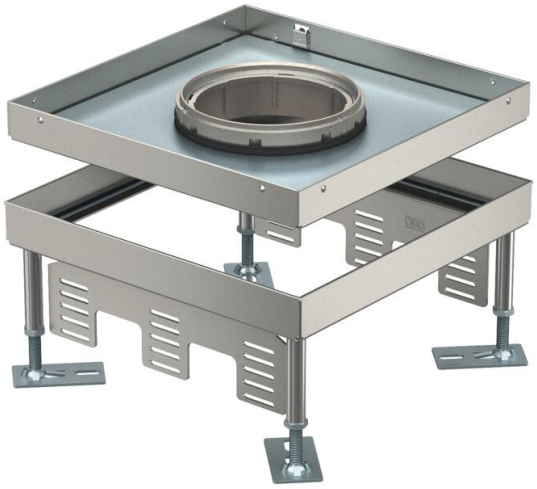

Height-adjustable cassette for tube bodies of nominal size 9 for the installation of devices in duct systems, raised and cavity floors in interior dry or wet-care floors.

For the installation of three UT4 universal supports for nine single devices with support ring/support clamp or 12 Modul 45® devices. 3 APMT5 cover plates can be installed. The tube body is not contained in the scope of delivery.
Three APMT5 cover plates can be installed.

IP 55

A2 Stainless steel

Master data

Item number	7408980
Type	RKFN3 9 VS 20
Description 1	Square cassette
Description 2	Lid for tube body
Manufacturer	OBO
Dimension	243x243x100
Material	Stainless steel
Smallest sales unit	1
Unit of quantity	Piece
Weight	355 kg
Weight unit	kg/100 pc.
CO2 Footprint (GWP) Cradle-to-Gate	22,1925 kg CO2e / 1 Piece

Technical data sheet

Height-adjustable cassette for tube body, RKFN, stainless steel

Item number: 7408980

Dimensions

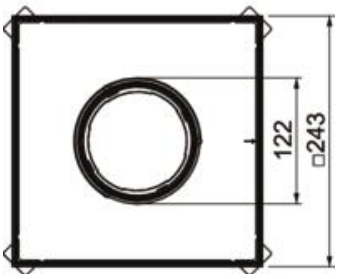

Length	243 mm
Width	243 mm
Height	105 mm
Dimension h	105 mm

Technical data

Number of installable devices	12
Number of cable outlets	1
Number of universal supports	3 x UT4
Cover version	Square
Cable outlet version	Lowerable tube body
Floor cut-out / Mounting opening	244x244
Floor care	Wet
Decouplable	no
Floor height, max.	150 mm
Floor height, min.	105 mm
Suitable for raised floor installation	yes
Suitable for cavity floor installation	yes
Suitable for underfloor box	250/350
Device support to accept mounting boxes	no
Length of installation dimensions	244 mm
Nominal size for device installation units	9
Height-adjustment range, max.	150 mm
Height-adjustment range, min.	105 mm
Standard	EN 50085-2-2
ROHS-conformant	Exempt
Protection rating (IP) when used	IP20
Protection rating (IP) when unused	IP55
Protection rating IK code	IK10
Heavy-duty version	no
Installation system type	UT4
Vertical load, large area	to 5,000 N
Vertical load, small area	to 3,000 N
Approvals	VDE
Floor covering thickness	20 mm