Technical data sheet

Heavy-duty frame cassette for tube body, RKFSL, nominal size 250-3
Item number: 7409524

Heavy-duty frame cassette for tube body for the installation of accessories in the UZD250-3in dry or wet-care floors in interior areas Load class 2 to 20 kN. The tube body is not contained in the scope of delivery.

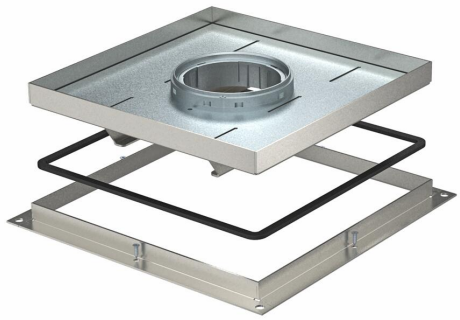

A2 Stainless steel

Master data

Item number	7409524
Type	RKF2 SL2 V2 25
Description 1	Heavy-duty frame cassette
Description 2	for tube
Manufacturer	OBO
Dimension	283x283x25
Material	Stainless steel 1.4301
Smallest sales unit	1
Unit of quantity	Piece
Weight	719 kg
Weight unit	kg/100 pc.
CO2 Footprint (GWP) Cradle-to-Gate	31,7076 kg CO2e / 1 Piece

Technical data sheet

Heavy-duty frame cassette for tube body, RKFSL, nominal size 250-3

Item number: 7409524

Dimensions

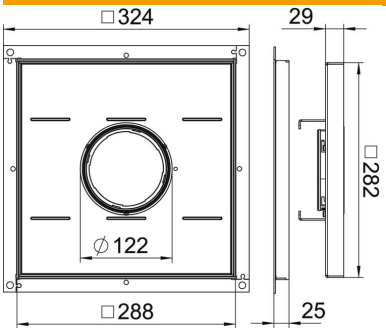

Dimension A	324 mm
Dimension B	288 mm
Dimension C	282 mm
Dimension h	25 mm

Technical data

Number of cable outlets	1
Cable outlet version	Lowerable tube body
Floor care	Wet
Suitable for raised floor installation	yes
Suitable for cavity floor installation	yes
Suitable for	Underfloor socket structure
Suitable for underfloor box	250
Length of installation dimensions	290 mm
ROHS-conformant	yes
Protection rating (IP) when used	IP20
Protection rating (IP) when unused	IP44
Protection rating IK code	IK10
Heavy-duty version	yes
Heavy load class	20 kN (OBO SL2)
Floor covering thickness	19 mm