Technical data sheet

Adjustable bend element, vertical 60 FT

Item number: 7075200

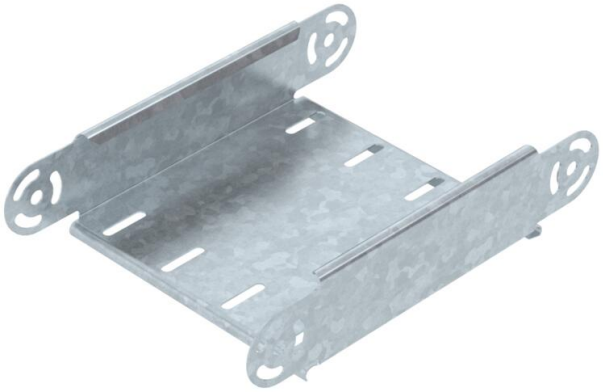

Adjustable vertical bend element, for all cable tray types with a side height of 60 mm.
RGV 60 adjustable connectors should be ordered separately and in the appropriate quantity.
RGV 60 and SKS 8x16 hexagonal bolts should be ordered separately.

St Steel

FT Hot-dip galvanised

Master data

Item number	7075200
Type	RGBEV 620 FT
Description 1	Adjustable bend element
Description 2	vertical
Manufacturer	OBO
Dimension	60x200
Colour	zinc
Material	Steel
Surface	Hot-dip galvanised
Surface standard	DIN EN ISO 1461
Smallest sales unit	1
Unit of quantity	Piece
Weight	69.3 kg
Weight unit	kg/100 pc.
CO2 Footprint (GWP) Cradle-to-Gate	2,2837 kg CO2e / 1 Piece

Technical data sheet

Adjustable bend element, vertical 60 FT

Item number: 7075200

Dimensions

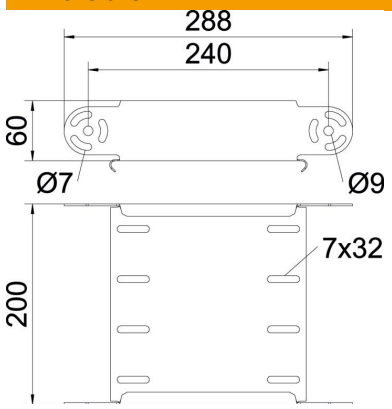

Width	200 mm
Width	8 in
Height	60 mm
Height	2 in
Plate thickness	1 mm
Dimension B	200 mm

Technical data

Bend (angle)	Adjustable
Connector version	Without connectors
Type	Adjustable bend element
Maintain electrical functions	no
Mounting perforation in base	no
NATO hole pattern	no
Change of direction	Vertical, rising/falling
ROHS-conformant	yes
Rustproof steel, pickled	no
Side perforation	no
Wide-span version	no
Type of connector, cable support system	Screwed