Technical data sheet

MS4141 mounting rail, slot 22 mm, A4, side perforation

Item number: 1123023

Heavy-duty C profile rail for individual installation of support constructions, e.g. for cable trays or as a panel for switchgear cabinets. Can also be used for cable routing, in conjunction with clamp clips with a U foot.

U 22

A4 Stainless steel

2B Bright, treated

Master data

Item number	1123023
Type	MSL4141PP3000A4
Description 1	Profile rail
Description 2	perforated, slot 22mm
Manufacturer	OBO
Dimension	3000x41x41
Material	Stainless steel 1.4571
Surface Surface standard	Bright, treated
Smallest sales unit	3
Unit of quantity	Metre
Weight	179.4 kg
Weight unit	kg/100 m
CO2 Footprint (GWP) Cradle-to-Gate	10,2002 kg CO2e / 1 Meter

Technical data sheet

MS4141 mounting rail, slot 22 mm, A4, side perforation

Item number: 1123023

Dimensions

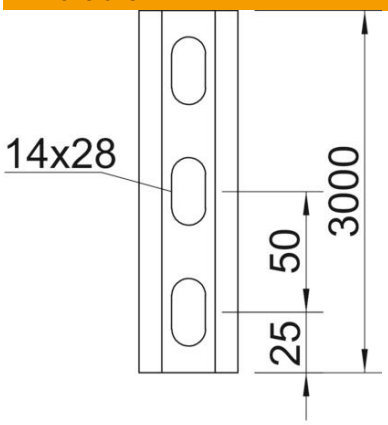

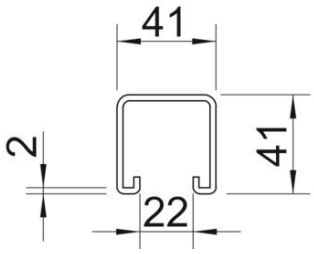

Length	3,000 mm
Width	41 mm
Height	41 mm
Dimension L	3,000 mm

Technical data

Breakable	no
Type of perforation	3 sides perforated
Version for	Single profile
Drill hole spacing, centre	50 mm
Maintain electrical functions	no
Hole size	14x28
Material thickness	2 mm
With perforation	yes
With toothing	yes
Profile shape	C profile
ROHS-conformant	yes
Slot width	22 mm
Static value A	2.01 cm^2
Static value Iy	5.13 cm^4
Static value Iz	5.88 cm^4
Static value Wy	2.51 cm^3
Static value Wz	2.69 cm^3