Technical data sheet

MS4121 mounting rail, slot 22 mm, FS, perforated

Item number: 1122922

Heavy-duty C profile rail for individual installation of support constructions, e.g. for cable trays or as a panel for switchgear cabinets. Can also be used for cable routing, in conjunction with clamp clips with a U foot.

22 U E30 E90

St Steel

FS Strip galvanised

Master data

Item number	1122922
Type	MS4121P6000FS
Description 1	Profile rail
Description 2	perforated, slot 22mm
Manufacturer	OBO
Dimension	6000x41x21
Material	Steel
Surface	Strip galvanised
Surface standard	DIN EN 10346
Smallest sales unit	6
Unit of quantity	Metre
Weight	140.95 kg
Weight unit	kg/100 m
CO2 Footprint (GWP) Cradle-to-Gate	3,457 kg CO2e / 1 Meter

Technical data sheet

MS4121 mounting rail, slot 22 mm, FS, perforated

Item number: 1122922

Dimensions

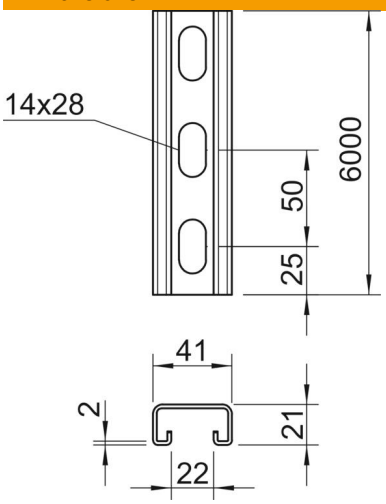

Length	6,000 mm
Width	41 mm
Height	21 mm
Dimension L	6,000 mm

Technical data

Breakable	no
Type of perforation	Perforated back
Version for	Single profile
Drill hole spacing, centre	50 mm
Maintain electrical functions	yes
Hole size	14x28
Material thickness	2 mm
With perforation	yes
With toothing	yes
Profile shape	C profile
ROHS-conformant	yes
Slot width	22 mm
Static value A	1.65 cm^2
Static value Iy	0.95 cm^4
Static value Iz	4.51 cm^4
Static value Wy	0.89 cm^3
Static value Wz	2.2 cm^3