Technical data sheet

Cable tray MKS-Magic® 110 FT

Item number: 6059177

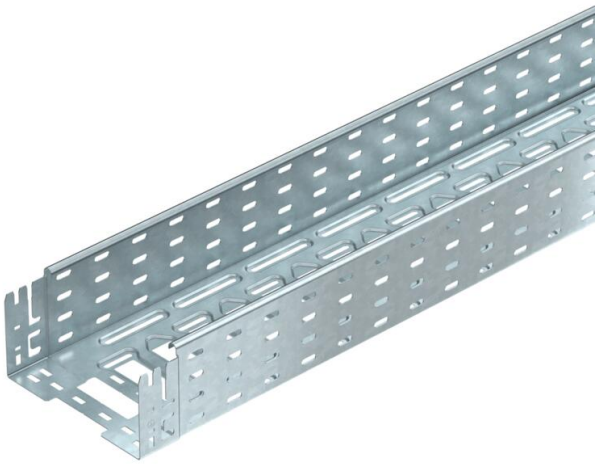

Cable tray with integrated quick fastening system. The usable length of the cable tray is 3,000 mm.

The cable tray has continuous side perforations of 7 x 20 mm for the installation of additional connection and mounting components.

From a cable tray width of 200 mm with 30% hole surface, suitable for use under sprinkler systems according to VdS guideline 2092.
Continuous equipotential bonding is guaranteed without additional components.

St Steel

FT Hot-dip galvanised

Master data

Item number	6059177
Type	MKSM 120 FT
Description 1	Cable tray MKSM
Description 2	perforated, quick connector
Manufacturer	OBO
Dimension	110x200x3050
Colour	zinc
Material	Steel
Surface	Hot-dip galvanised
Surface standard	DIN EN ISO 1461
Smallest sales unit	3
Unit of quantity	Metre
Weight	322.229 kg
Weight unit	kg/100 m
CO2 Footprint (GWP) Cradle-to-Gate	8,0488 kg CO2e / 1 Meter

Technical data sheet

Cable tray MKS-Magic® 110 FT

Item number: 6059177

Dimensions

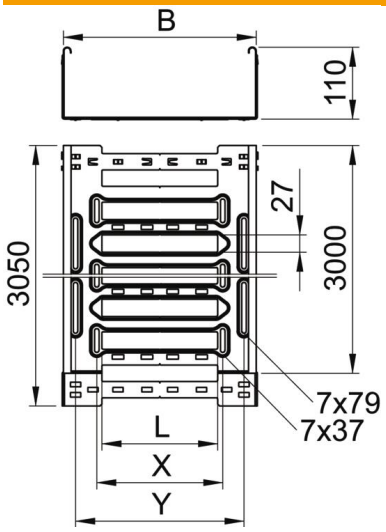

Length	3,050 mm
Width	200 mm
Height	110 mm
Plate thickness	1 mm
Dimension B	200 mm
Dimension L	80 mm
Dimension x	96 mm
Dimension y	162 mm

Technical data

Connector version	Integrated connector
Mounting system fastening type	Floor Ceiling Wall
Walkable	no
Maintain electrical functions	no
With cover	no
Mounting perforation in base	yes
NATO hole pattern	no
Usable cross-section	218 cm²
Usable cross-section	21800 mm²
ROHS-conformant	yes
Rustproof steel, pickled	no
Side perforation	yes
Wide-span version	no
Magnetic shield insulation without cover	20 dB
Magnetic shield insulation with cover	50 dB
Load test type according to IEC 61537	Type II
Usable length	3000 mm
Type of connector, cable support system	Click fastening

Loads

Insertable support spacings, min.	1.5 m
Insertable support spacings, max.	3 m
Support spacing 1.5 m	2 kN/m
Support spacing 2.0 m	1.5 kN/m
Support spacing 2.5 m	1.07 kN/m
Support spacing 3.0 m	0.7 kN/m

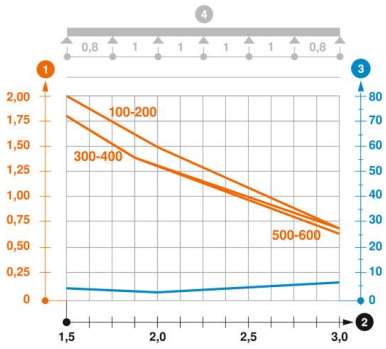

Load diagram, cable tray, type MKSM 110

1. Permitted cable tray/ladder load in kN/m without man load
2. Support width in m
3. Rail bend in mm at permitted kN/m
4. Load scheme during testing

— Load curve with cable tray/ladder width in mm

— Strut bend curve according to support width