Technical data sheet

Multi-Quick clip, metric

Item number: 2153734

Flush-mounted clip to accept metric pipes and Quick-Pipe® electrical installation pipes. Flexible clamping range of several millimetres. Universal fastening options on walls and ceilings, both indoors and outdoors. Toolless pipe mounting. Can also be arranged with OBO Quick or proQuick clip.

PA Polyamide

Master data

Item number	2153734
Type	M-Quick M32 LGR
Description 1	Multi-Quick clip
Manufacturer	OBO
Dimension	25-32mm
Colour	Light grey; RAL 7035
Material	Polyamide
Smallest sales unit	50
Unit of quantity	Piece
Weight	1.39 kg
Weight unit	kg/100 pc.
CO2 Footprint (GWP) Cradle-to-Gate	0,0591 kg CO2e / 1 Piece

Technical data sheet

Multi-Quick clip, metric

Item number: 2153734

Dimensions

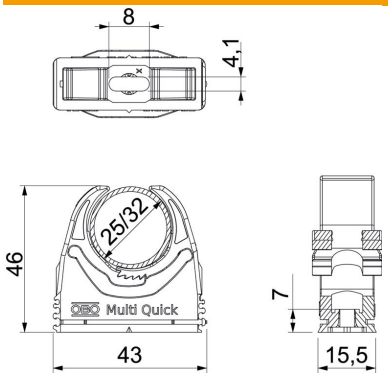

Dimension A	43 mm
Dimension B	15.5 mm
Dimension E	8 mm
Dimension F	4.1 mm
Dimension h	7 mm
Dimension H	46 mm

Technical data

Expandable	yes
Number of cables/pipes	1
Pull-out value	60 N
Fastening type	Screw hole
Flame-resistant	acc. to VDE 0471/DIN 695 Part 2-1, test temperature 650°C
Closed	no
Halogen-free	yes
With inlay	no
Snap system	yes
ROHS-conformant	yes
Quick clip installation	Durchgangsloch, auf M6 Gewinde aufschraubbar
Clamping range D, max.	32 mm
Clamping range D, min.	25 mm
UV-resistant	no