Technical data sheet

LG 60 cable ladder, 3 m NS FS

Item number: 6208509

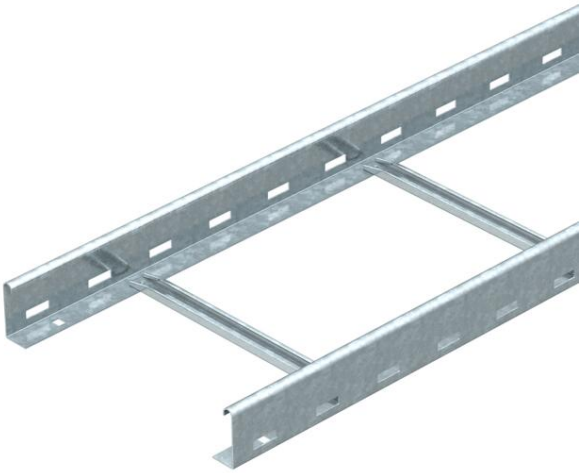

Cable ladder with perforated side rail of side height 60 mm with riveted C profile rungs, open in an upwards direction (NS version).
The cable ladder is shipped folded up.
You can find the appropriate U clamp of type 2056N in the vertical ladder systems chapter.
Magnetic shield insulation without cover 10 dB, with cover 15 dB.

St	Steel
FS	Strip galvanised

Master data

Item number	6208509
Type	LG 630 NS 3 FS
Description 1	Cable ladder
Description 2	perforated, with NS rung
Manufacturer	OBO
Dimension	60x300x3000
Colour	zinc
Material	Steel
Surface	Strip galvanised
Surface standard	DIN EN 10346
Smallest sales unit	3
Unit of quantity	Metre
Weight	262.07 kg
Weight unit	kg/100 m
CO2 Footprint (GWP) Cradle-to-Gate	6,243 kg CO2e / 1 Meter

Technical data sheet

LG 60 cable ladder, 3 m NS FS

Item number: 6208509

Dimensions

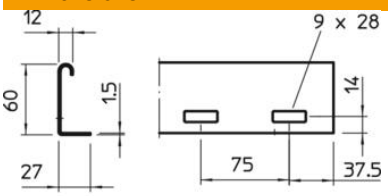

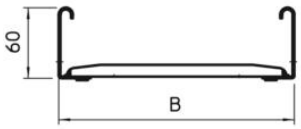

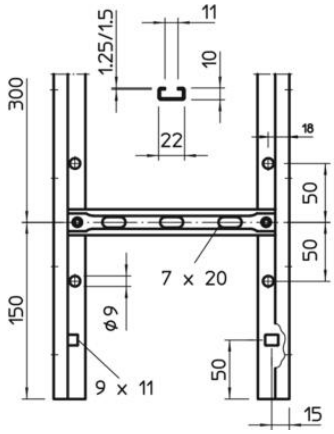

Dimension	60x300x3000
Length	3,000 mm
Width	300 mm
Height	60 mm

Technical data

Version of the rungs	Profile perforated
Side rail version	Flat profile
Fastening of rung	Blind riveted
Mounting system fastening type	Floor Ceiling Wall
Maintain electrical functions	no
Usable cross-section	148 cm²
Usable cross-section	14800 mm²
ROHS-conformant	yes
Rustproof steel, pickled	yes
Side perforation	yes
Rung distance	300 mm
Wide-span version	no
Rail thickness	1.5 mm

Loads

Support spacing 1.5 m	3.1 kN/m
Support spacing 2.0 m	2 kN/m
Support spacing 2.5 m	1.5 kN/m
Support spacing 3.0 m	1 kN/m
Support spacing 3.5 m	0.6 kN/m
Support spacing 4.0 m	0.4 kN/m

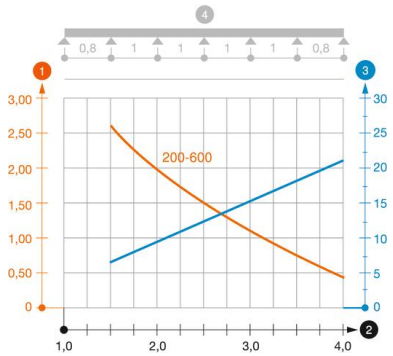

Load diagram, cable ladder, type LG 60 NS

1. Permitted cable tray/ladder load in kN/m without man load
2. Support width in m
3. Rail bend in mm at permitted kN/m
4. Load scheme during testing

— Load curve with cable tray/ladder width in mm

— Strut bend curve according to support width