Technical data sheet

Cable ladder LG 110, 3 m VS FT

Item number: 6216432

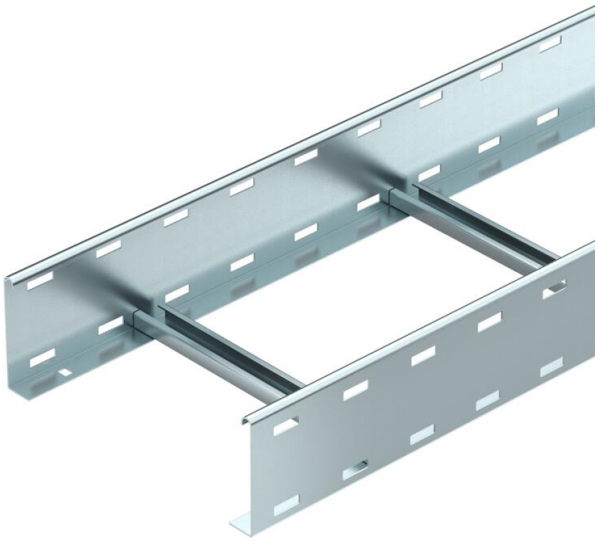

Cable ladder with perforated side rail of side height 110 mm with riveted C profile rungs, open in an upwards direction.
The cable ladder is shipped folded up.

You can find the appropriate type 2056 clamp clip in the vertical ladder systems section.
Magnetic shield insulation without cover 10 dB, with cover 15 dB.

St Steel

FT Hot-dip galvanised

Master data

Item number	6216432
Type	LG 115 VS 3 FT
Description 1	Cable ladder
Description 2	perforated, with VS rung
Manufacturer	OBO
Dimension	110x500x3000
Colour	zinc
Material	Steel
Surface	Hot-dip galvanised
Surface standard	DIN EN ISO 1461
Smallest sales unit	3
Unit of quantity	Metre
Weight	469.533 kg
Weight unit	kg/100 m
CO2 Footprint (GWP) Cradle-to-Gate	10,4622 kg CO2e / 1 Meter

Technical data sheet

Cable ladder LG 110, 3 m VS FT

Item number: 6216432

Dimensions

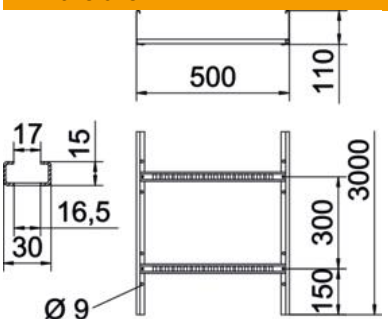

Dimension	110x500x3000
Length	3,000 mm
Width	500 mm
Height	110 mm
Dimension B	500 mm
Rung slot dimension	16.50

Technical data

Version of the rungs	Profile perforated
Side rail version	Flat profile
Fastening of rung	Blind riveted
Mounting system fastening type	Floor Ceiling Wall
Maintain electrical functions	no
Usable cross-section	475 cm²
Usable cross-section	47500 mm²
ROHS-conformant	yes
Rustproof steel, pickled	no
Side perforation	yes
Rung distance	300 mm
Wide-span version	no
Rail thickness	1.5 mm

Technical data sheet

Cable ladder LG 110, 3 m VS FT

Item number: 6216432

Loads

Insertable support spacings, min.	2 m
Insertable support spacings, max.	6 m
Support spacing 2.0 m	3.1 kN/m
Support spacing 2.5 m	2 kN/m
Support spacing 3.0 m	1.4 kN/m
Support spacing 3.5 m	0.9 kN/m
Support spacing 4.0 m	0.65 kN/m
Support spacing 4.5 m	0.55 kN/m
Support spacing 5.0 m	0.5 kN/m
Support spacing 6.0 m	0.15 kN/m

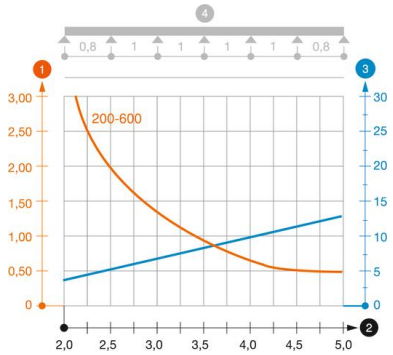

Load diagram, cable ladder, type LG 110 VS

1. Permitted cable tray/ladder load in kN/m without man load
2. Support width in m
3. Rail bend in mm at permitted kN/m
4. Load scheme during testing

— Load curve with cable tray/ladder width in mm

— Strut bend curve according to support width