Technical data sheet

Head plate, variable FT

Item number: 6348883

Variable head plate for installation on US 3 supports and profile rails, type AML3518/AMS3518 and CML3518/CMS3518.
The variable head plate can be mounted to fixed lengths of the U support, type US 3, or profile rails, type AML3518/AMS3518 and CML3518/CMS3518. The maximum angle adjustment is 20° on one side.

US3

St Steel

FT Hot-dip galvanised

Master data

Item number	6348883
Type	KU 3 V FT
Description 1	Head plate
Description 2	for US 3 and 3518, variable
Manufacturer	OBO
Dimension	140x120x40
Colour	zinc
Material	Steel
Surface	Hot-dip galvanised
Surface standard	DIN EN ISO 1461
Smallest sales unit	1
Unit of quantity	Piece
Weight	41.3 kg
Weight unit	kg/100 pc.
CO2 Footprint (GWP) Cradle-to-Gate	1,2484 kg CO2e / 1 Piece

Technical data sheet

Head plate, variable FT

Item number: 6348883

Dimensions

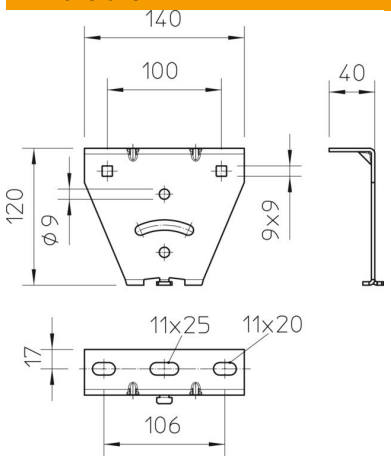

Length	140 mm
Width	40 mm
Height	120 mm

Technical data

Version for	Screw head plate
Maintain electrical functions	no
Suitable for ceiling fastening	yes
Suitable for panel fastening	no
Suitable for profile shapes	U profile
ROHS-conformant	yes
Rustproof steel, pickled	no
Angle range, max.	90 mm
Angle range, min.	90 mm