Technical data sheet

Head plate, variable FS

Item number: 6348881

Variable head plate for installation on US 3 supports and profile rails, type AML3518/AMS3518 and CML3518/CMS3518.
The variable head plate can be mounted to fixed lengths of the U support, type US 3, or profile rails, type AML3518/AMS3518 and CML3518/CMS3518. The maximum angle adjustment is 20° on one side.

US3

St Steel

FS Strip galvanised

Master data

Item number	6348881
Type	KU 3 V FS
Description 1	Head plate
Description 2	for US 3 and 3518, variable
Manufacturer	OBO
Dimension	140x120x40
Colour	zinc
Material	Steel
Surface	Strip galvanised
Surface standard	DIN EN 10346
Smallest sales unit	1
Unit of quantity	Piece
Weight	40 kg
Weight unit	kg/100 pc.
CO2 Footprint (GWP) Cradle-to-Gate	1,504 kg CO2e / 1 Piece

Technical data sheet

Head plate, variable FS

Item number: 6348881

Dimensions

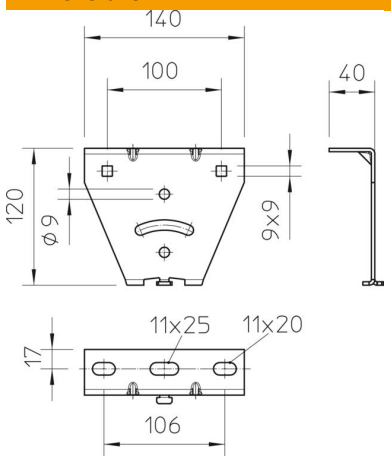

Length	140 mm
Width	40 mm
Height	120 mm

Technical data

Version for	Screw head plate
Maintain electrical functions	no
Suitable for ceiling fastening	yes
Suitable for panel fastening	no
Suitable for profile shapes	U profile
ROHS-conformant	yes
Rustproof steel, pickled	no
Angle range, max.	90 mm
Angle range, min.	90 mm