Technical data sheet

Magic straight connector set DD

Item number: 6068948

Cable tray connector with quick fastening for the screwless connection of perforated cable trays with a side height of 60 mm.
The optimised design means that the connector can be used to create radii and as a length compensation piece for large temperature deviations.

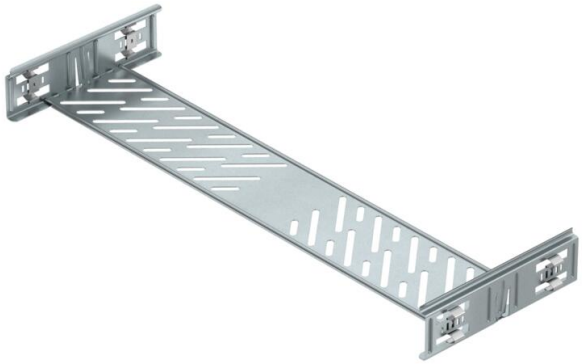

St	Steel
DD	Strip galvanised zinc/aluminium, Double Dip

Master data

Item number	6068948
Type	KTSMV 660 DD
Description 1	Straight connector set
Description 2	for cable tray Magic
Manufacturer	OBO
Dimension	60x600x200
Colour	zinc
Material	Steel
Surface	Strip galvanised zinc/aluminium, Double Dip
Surface standard	DIN EN 10346
Smallest sales unit	1
Unit of quantity	Piece
Weight	64.2 kg
Weight unit	kg/100 pc.
CO2 Footprint (GWP) Cradle-to-Gate	2,7959 kg CO2e / 1 Piece

Technical data sheet

Magic straight connector set DD

Item number: 6068948

Dimensions

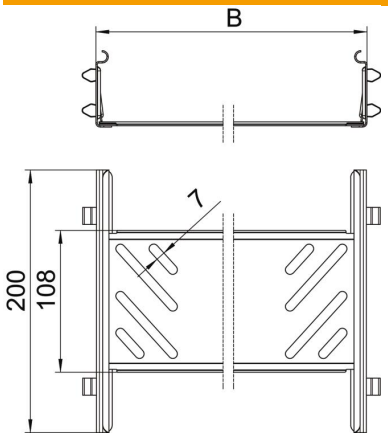

Dimension	60x600
Length	200 mm
Width	600 mm
Height	60 mm
Height	2 in
Plate thickness	1 mm
Dimension B	600 mm

Technical data

Version for	Straight connector
Maintain electrical functions	no
Suitable for mesh cable tray	no
Suitable for cable ladder	no
Suitable for cable tray	yes
Suitable for cable tray system height	60 mm
Adjustable connector, horizontal	no
Articulated connector, vertical	no
ROHS-conformant	yes
Rustproof steel, pickled	no
Connection type	Screwless connector