Technical data sheet

Neutral conductor terminal, with screw contacts, 4 terminals

Item number: 2016255

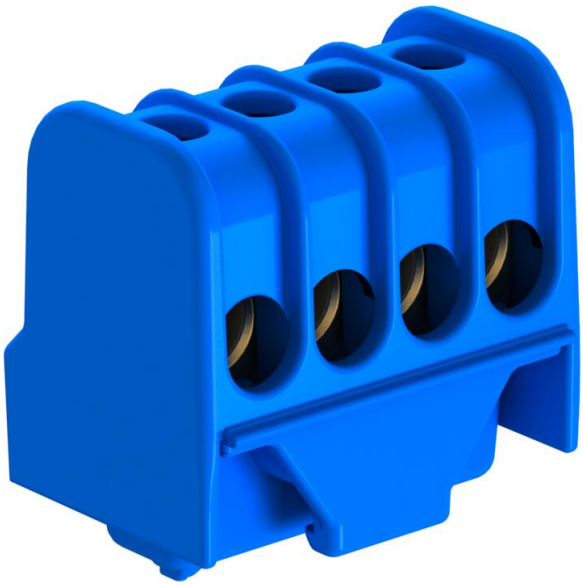

Neutral conductor connection terminal, brass, steel screws, electrogalvanised and transparently passivated, nominal cross-section 6 ÷ 16 mm², nominal voltage 400 V, 1-pole, with terminal sockets, max. connectable conductors per terminal 4 x 16 mm², 4 x 10 mm², 8 x 6 mm² or 12 x 4 mm².

PA Polyamide

Master data

Item number	2016255
Type	KL-DBN4x16BL
Description 1	Neutral conductor clamp
Description 2	with screw contacts
Manufacturer	OBO
Dimension	4x16mm²
Colour	Blue
Material	Polyamide
Smallest sales unit	10
Unit of quantity	Piece
Weight	1.98 kg
Weight unit	kg/100 pc.
CO2 Footprint (GWP) Cradle-to-Gate	0,0849 kg CO2e / 1 Piece

Technical data sheet

Neutral conductor terminal, with screw contacts, 4 terminals

Item number: 2016255

Dimensions

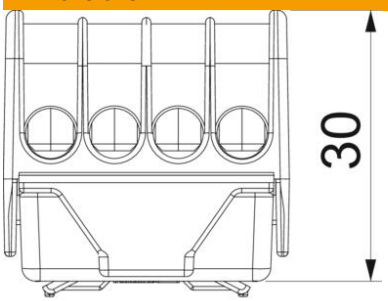

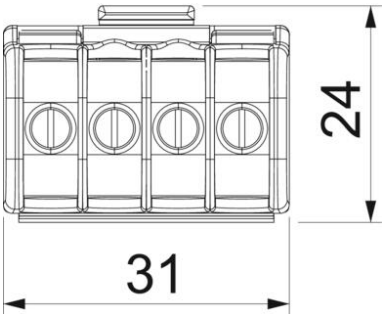

Technical data

Closing plate required	no
Connectable conductor cross-section, single-wire, max.	16 mm²
Connectable conductor cross-section, single-wire, min.	4 mm²
Connection position	Side
Number of screwless terminals per pole	1
Version of electrical connection 1	Screw connection
Insulation material	Thermoplast
Mounting type	Miscellaneous
Nominal cross-section, max.	16 mm²
Nominal cross-section, min.	6 mm²
Nominal voltage	400 V
Nominal current	76 A
Pole number	1
Cross-section	max. connectable conductors per terminal max. 4 x 16 mm², 4 x 10 mm², 8x6 mm² or 12 x 4 mm² mm²
ROHS-conformant	Exempt