Technical data sheet

Joint connector G

Item number: 6016596

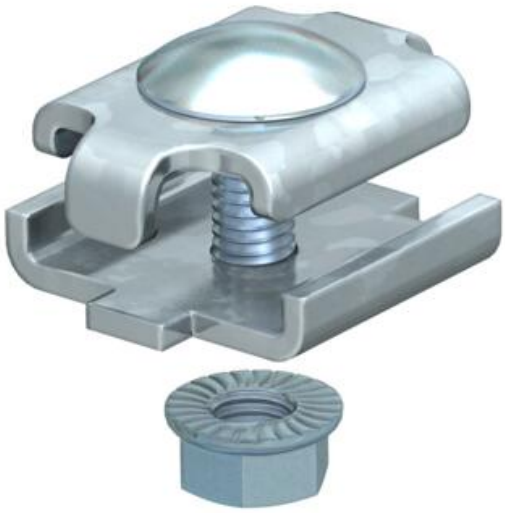

Screwed version of joint connector for mesh cable trays.
Including FRS M6 x 20 bolt with flange nut.
Figure: Positioning and quantity of mesh cable tray connectors.

50–150 mm = 2 units

200–300 mm = 3 units

400–450 mm = 4 units

500–600 mm = 5 units

St	Steel
G	Electrogalvanised

Master data

Item number	6016596
Type	GSV 34 G
Description 1	Joint connector
Description 2	for mesh cable tray
Manufacturer	OBO
Colour	zinc
Material	Steel
Surface	Electrogalvanised
Surface standard	EN ISO 19598 / EN ISO 4042
Smallest sales unit	20
Unit of quantity	Piece
Weight	3.155 kg
Weight unit	kg/100 pc.
CO2 Footprint (GWP) Cradle-to-Gate	0,0913 kg CO2e / 1 Piece

Technical data sheet

Joint connector G

Item number: 6016596

Dimensions

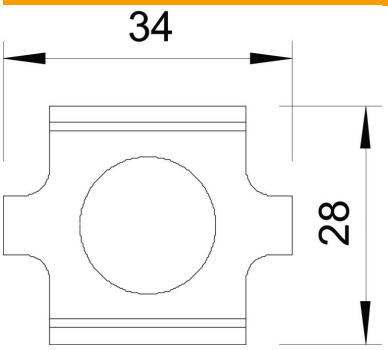

Dimension	34 x 27,5
Length	34 mm
Width	29 mm
Width	1.14 in
Height	24 mm
Height	0.94 in

Technical data

Version for	Straight connector
Maintain electrical functions	no
Suitable for mesh cable tray	yes
Suitable for cable ladder	no
Suitable for cable tray	no
Adjustable connector, horizontal	no
Articulated connector, vertical	no
Suitable for mesh cable tray wire, max.	4.9 mm
Suitable for mesh cable tray wire, min.	3.9 mm
ROHS-conformant	yes
Rustproof steel, pickled	no
Connection type	Screw connector