Technical data sheet

Mesh cable tray GR-Magic® 55 G

Item number: 6001441

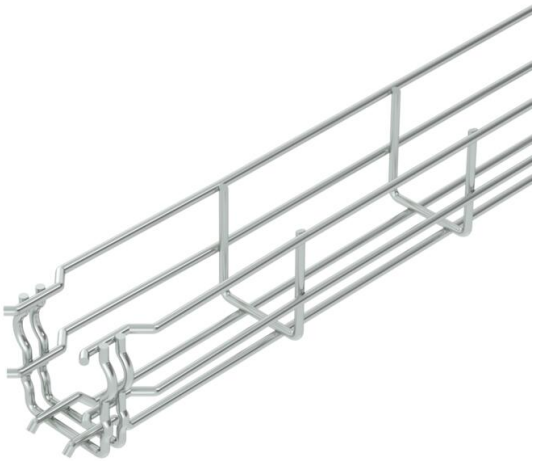

Mesh cable tray with shaped connector of side height 55 mm.
No additional connection components are required for the mesh cable tray, it is simply interlocked. The grid width is 50 x 100 mm (exception: GRM 55/50 = 20 x 100 mm). Tested for the maintenance of electrical function according to DIN 4102 Part 12 (type: GRM 55 200 4.8 G, GRM 55 300 G, GRM 55 400 G, mounting work and parameters according to valid test certificate).

Tested for installation above suspended fire protection ceilings (type: GRM 55 100 G, GRM 55 200 G, GRM 55 300 G, GRM 55 400 G, fire load 30 minutes, mounting work and parameters according to fire protection reports).
Magnetic shield insulation without cover 15 dB, with cover 25 dB.

You can find detailed information regarding the UL classification in the respective certification.

E30 E60 E90

St Steel

G Electrogalvanised

Master data

Item number	6001441
Type	GRM 55 50 G
Description 1	Mesh cable tray GRM
Manufacturer	OBO
Dimension	55x50x3000
Colour	zinc
Material	Steel
Surface	Electrogalvanised
Surface standard	EN ISO 19598 / EN ISO 4042
Smallest sales unit	3
Unit of quantity	Metre
Weight	67 kg
Weight unit	kg/100 m
CO2 Footprint (GWP) Cradle-to-Gate	1,2752 kg CO2e / 1 Meter

Technical data sheet

Mesh cable tray GR-Magic® 55 G

Item number: 6001441

Dimensions

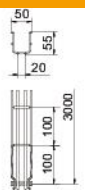

Length	3,000 mm
Width	50 mm
Width	1.97 in
Height	55 mm
Height	2.17 in
Dimension B	52 mm
Dimension H	58 mm

Technical data

Connector version	Integrated connector
Mounting system fastening type	Floor Ceiling Wall
Maintain electrical functions	yes
Integrated partition	Without
Usable cross-section	16 cm²
Usable cross-section	1600 mm²
Profile shape	U-shaped
ROHS-conformant	yes
Rustproof steel, pickled	no
Screwless connector	yes
Wide-span version	no
Load test type according to IEC 61537	Type II
Type of connector, cable support system	Click fastening

Loads

Insertable support spacings, min.	1 m
Insertable support spacings, max.	2.5 m
Support spacing 1.0 m	0.35 kN/m
Support spacing 1.5 m	0.2 kN/m
Support spacing 2.0 m	0.1 kN/m
Support spacing 2.5 m	0.1 kN/m

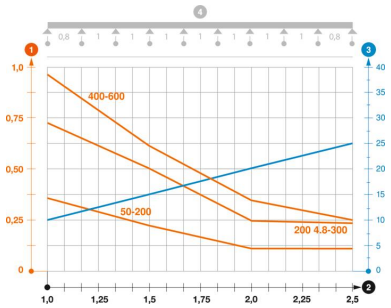

Load diagram, GR-Magic mesh cable tray, type GRM 55

1. Permitted cable tray/ladder load in kN/m without man load
2. Support width in m
3. Rail bend in mm at permitted kN/m
4. Load scheme during testing

Load curve with cable tray/ladder width in mm

Strut bend curve according to support width