# Technical data sheet

## Mesh cable tray GR-Magic® 35 FT

## Item number: 6000069

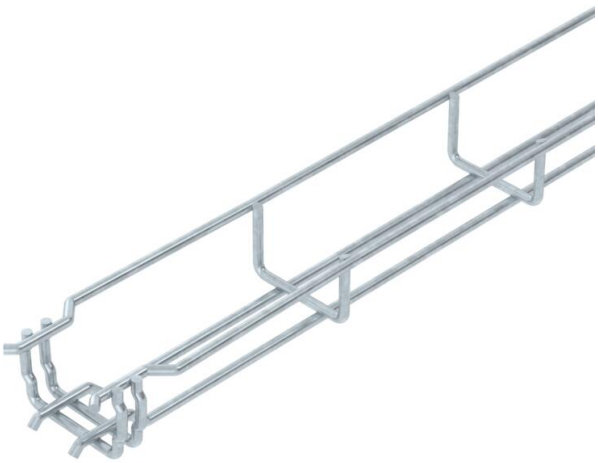

Mesh cable tray with shaped connector of side height 35 mm.

No additional connection components are required for the mesh cable tray, it is simply interlocked. The grid width is 50 x 100 mm (exception: GRM 35/50 = 20 x 100 mm).
Magnetic shield insulation without cover 15 dB, with cover 25 dB.

| | |
|---|---|
| St | Steel |
| FT | Hot-dip galvanised |

### Master data

| | |
|---|---|
| Item number | 6000069 |
| Type | GRM 35 50 FT |
| Description 1 | Mesh cable tray GRM |
| Manufacturer | OBO |
| Dimension | 35x50x3000 |
| Colour | zinc |
| Material | Steel |
| Surface | Hot-dip galvanised |
| Surface standard | DIN EN ISO 1461 |
| Smallest sales unit | 3 |
| Unit of quantity | Metre |
| Weight | 46 kg |
| Weight unit | kg/100 m |
| CO2 Footprint (GWP) Cradle-to-Gate | 1,0255 kg CO2e / 1 Meter |

# Technical data sheet

## Mesh cable tray GR-Magic® 35 FT

## Item number: 6000069

### Dimensions

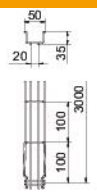


| | |
|---|---|
| Length | 3,000 mm |
| Width | 50 mm |
| Width | 1.97 in |
| Height | 35 mm |
| Height | 1.38 in |
| Dimension B | 52 mm |

### Technical data

| | |
|---|---|
| Connector version | Integrated connector |
| Mounting system fastening type | Floor Ceiling Wall |
| Maintain electrical functions | no |
| Integrated partition | Without |
| Usable cross-section | 9.4 cm² |
| Usable cross-section | 1750 mm² |
| Profile shape | U-shaped |
| ROHS-conformant | yes |
| Rustproof steel, pickled | no |
| Screwless connector | yes |
| Wide-span version | no |
| Load test type according to IEC 61537 | Type II |
| Type of connector, cable support system | Click fastening |

### Loads

| | |
|---|---|
| Insertable support spacings, min. | 1 m |
| Insertable support spacings, max. | 2 m |
| Support spacing 1.0 m | 0.25 kN/m |
| Support spacing 1.5 m | 0.11 kN/m |
| Support spacing 2.0 m | 0.1 kN/m |

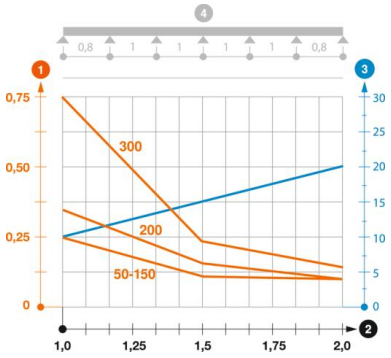


**Load diagram, GR-Magic mesh cable tray, type GRM 35**

1. Permitted cable tray/ladder load in kN/m without man load
2. Support width in m
3. Rail bend in mm at permitted kN/m
4. Load scheme during testing

— Load curve with cable tray/ladder width in mm

— Strut bend curve according to support width