Technical data sheet

Mesh cable tray GR-Magic® 35 A2

Item number: 6000055

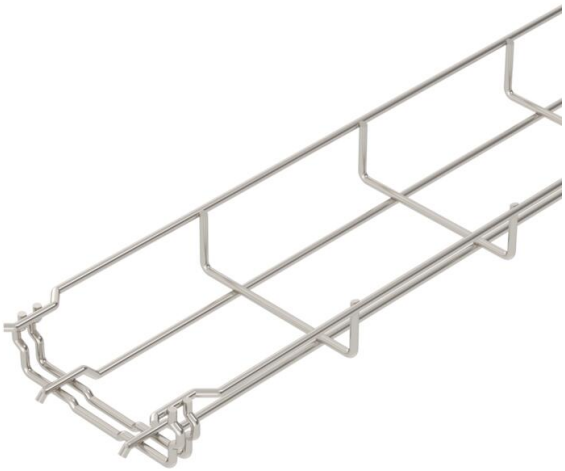

Mesh cable tray with shaped connector of side height 35 mm.

No additional connection components are required for the mesh cable tray, it is simply interlocked. The grid width is 50 x 100 mm (exception: GRM 35/50 = 20 x 100 mm).
Magnetic shield insulation without cover 15 dB, with cover 25 dB.

A2	Stainless steel
2B	Bright, treated

Master data

Item number	6000055
Type	GRM 35 100 A2
Description 1	Mesh cable tray GRM
Manufacturer	OBO
Dimension	35x100x3000
Colour	stainless steel
Material	Stainless steel 1.4301
Surface Surface standard	Bright, treated
Smallest sales unit	3
Unit of quantity	Metre
Weight	49 kg
Weight unit	kg/100 m
CO2 Footprint (GWP) Cradle-to-Gate	2,5382 kg CO2e / 1 Meter

Technical data sheet

Mesh cable tray GR-Magic® 35 A2

Item number: 6000055

Dimensions

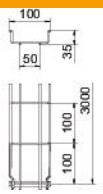

Length	3,000 mm
Width	100 mm
Width	4 in
Height	35 mm
Height	1 in
Dimension B	100 mm

Technical data

Connector version	Integrated connector
Mounting system fastening type	Floor Ceiling Wall
Maintain electrical functions	no
Integrated partition	Without
Usable cross-section	23 cm²
Usable cross-section	3500 mm²
Profile shape	U-shaped
ROHS-conformant	yes
Rustproof steel, pickled	yes
Screwless connector	yes
Wide-span version	no
Load test type according to IEC 61537	Type II
Type of connector, cable support system	Click fastening

Loads

Insertable support spacings, min.	1 m
Insertable support spacings, max.	2 m
Support spacing 1.0 m	0.25 kN/m
Support spacing 1.5 m	0.11 kN/m
Support spacing 2.0 m	0.1 kN/m

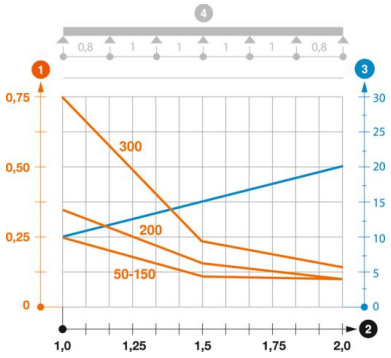

Load diagram, GR-Magic mesh cable tray, type GRM 35

1. Permitted cable tray/ladder load in kN/m without man load
2. Support width in m
3. Rail bend in mm at permitted kN/m
4. Load scheme during testing

— Load curve with cable tray/ladder width in mm

— Strut bend curve according to support width