Technical data sheet

Device installation trunking Rapid 80, trunking width 170, trunking height 70
Item number: 6274706

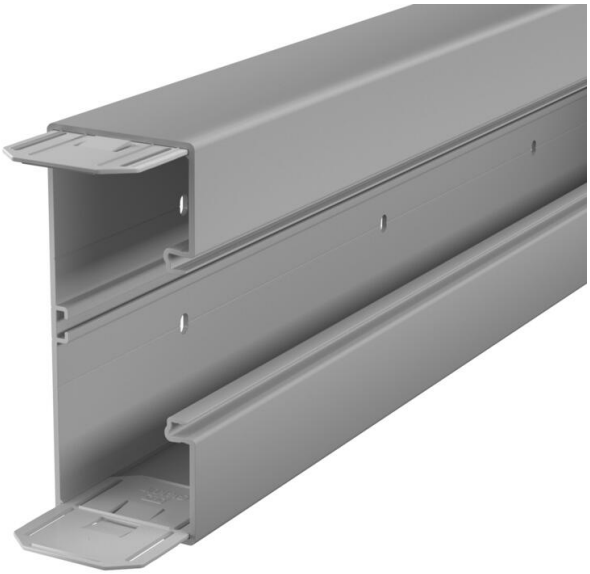

GK device installation trunking, made of lead-free PVC, suitable for installing directly on the wall or on wall panels. Fastening takes place using the perforation in the trunking. The GK device installation trunking possesses a C profile on the floor to accept a plastic partition. All the switch programmes with a support ring and support clamp design as well as Modul 45 installation devices can be installed in the accessory mounting boxes of series 71GD.... The system opening is 76.5 mm. On each trunking length, a coupling pair is pre-assembled on one side. The cover must be ordered separately.

PVC Polyvinylchloride

Master data

Item number	6274706
Type	GK-70170GR
Description 1	Device installation trunking
Description 2	with base perforation
Manufacturer	OBO
Dimension	70x170x2000
Colour	Stone grey; RAL 7030
Material	Polyvinylchloride
Smallest sales unit	2
Unit of quantity	Metre
Weight	180 kg
Weight unit	kg/100 m
CO2 Footprint (GWP) Cradle-to-Gate	3,4975 kg CO2e / 1 Meter

Technical data sheet

Device installation trunking Rapid 80, trunking width 170, trunking height 70
Item number: 6274706

Dimensions

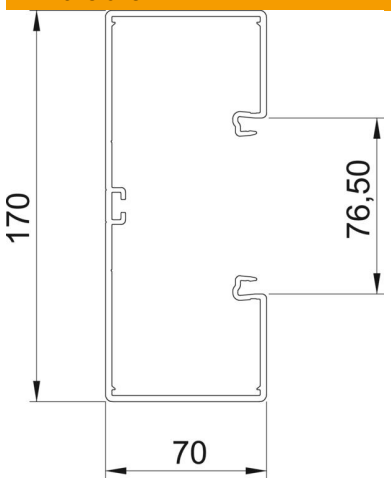

Length	2,000 mm
Width	170 mm
Height	70 mm

Technical data

Number of covers	1
Number of insertable partitions	1
Rear panel version (inner side)	Continuous C profile
Rectangular shape	yes
Base perforation	With base perforation
Halogen-free	no
Cable retaining clip	no
Duct connector	yes
Cover mounting type	Internal
Mounting perforation in base	yes
Usable cross-section	10100 mm²
Cover supplied	no
Cover width	76.5 mm
ROHS-conformant	yes
Protection rating	IP30
Protective film	yes
Protection rating IK code	IK08
Symmetrical	yes
Permitted temperature range, max.	60 °C
Permitted temperature range, min.	-15 °C