Technical data sheet

Clamp clip 2056 U-foot, 1-fold, plastic pressure sleeve, FT

Item number: 1186789

Clamp clip with U-foot, plastic pressure sleeve made of polypropylene. For vertical and horizontal mounting of 1 single cable on a C-profile rail. For slot width 18–22 mm. With 1-start screw thread on pressure sleeve, universal hexagonal screw head WAF10, with slot and cross recess. Suitable for assembly indoors and outdoors. We recommend the use of a counter-sleeve. In AC circuits the product shall not be used with single core cable in galvanised cable ladders and profile rails because of the inductive heating.

HALOGEN FREE · 18 · 22 · U · 40 kA

St Steel

FT Hot-dip galvanised

Master data

Item number	1186789
Type	BS-U1-K-90 FT
Description 1	Clamp clip 2056
Manufacturer	OBO
Dimension	82-90mm
Material	Steel
Surface	Hot-dip galvanised
Surface standard	DIN EN ISO 1461
Smallest sales unit	25
Unit of quantity	Piece
Weight	26.2 kg
Weight unit	kg/100 pc.
CO2 Footprint (GWP) Cradle-to-Gate	0,6095 kg CO2e / 1 Piece

Technical data sheet

Clamp clip 2056 U-foot, 1-fold, plastic pressure sleeve, FT

Item number: 1186789

Dimensions

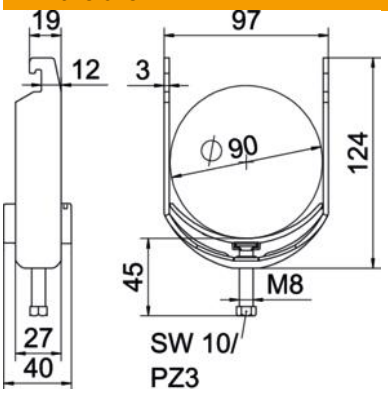

Length	27 mm
Width	97 mm
Height	124 mm
Plate thickness	3 mm
Dimension A	27 mm
Dimension B	97 mm
Dimension C	40 mm
Dimension G (mm)	M8
Dimension H	124 mm
Dimension L	45 mm
Dimension t	3 mm

Technical data

Number of cables/pipes	1
For pipe diameter, max.	90 mm
For pipe diameter, min.	82 mm
for rail with slot width (with interval), max.	22 mm
for rail with slot width (with interval), min.	18 mm
Thread	M8
Halogen-free	yes
Length of external dimensions	40 mm
Max. Tightening torque	5 Nm
With plastic trough	yes
Mounting type	Profile rail
ROHS-conformant	yes
Slot width	10 mm
Clamping range D, max.	90 mm
Clamping range D, min.	82 mm
Surface addition	hot galvanised
Material addition	Steel
With counter-trough	no
Material of trough	Plastic
Material quality of trough	Polypropylene