Technical data sheet

Clamp clip 2056 H-foot, 2-fold, plastic pressure sleeve, A2

Item number: 1186350

Clamp clip with hammerhead foot, plastic pressure sleeve made of polypropylene. For vertical and horizontal mounting of 2 single cables on a C-profile rail. For a slot width 16–17 mm. With 1-start screw thread on pressure sleeve, universal hexagonal screw head WAF10, with slot and cross recess. Suitable for assembly indoors and outdoors. Multiple cables should be separated by double sleeves. We recommend the use of a counter-sleeve.

HALOGEN FREE | CE | 16-17 | H

A2 Stainless steel

2B Bright, treated

Master data

Item number	1186350
Type	BS-H2-K-52 A2
Description 1	Clamp clip 2056
Description 2	double
Manufacturer	OBO
Dimension	46-52mm
Material	Stainless steel 1.4301
Surface Surface standard	Bright, treated
Smallest sales unit	25
Unit of quantity	Piece
Weight	16.7 kg
Weight unit	kg/100 pc.
CO2 Footprint (GWP) Cradle-to-Gate	1,0468 kg CO2e / 1 Piece

Technical data sheet

Clamp clip 2056 H-foot, 2-fold, plastic pressure sleeve, A2

Item number: 1186350

Dimensions

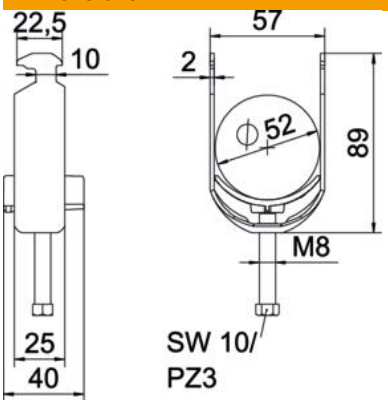

Length	25 mm
Width	57 mm
Height	146 mm
Plate thickness	2 mm
Dimension A	25 mm
Dimension B	57 mm
Dimension C	40 mm
Dimension G (mm)	M8
Dimension H	146 mm
Dimension L	58 mm
Dimension t	2 mm

Technical data

Number of cables/pipes	2
For pipe diameter, max.	52 mm
For pipe diameter, min.	46 mm
for rail with slot width (with interval), max.	17 mm
for rail with slot width (with interval), min.	16 mm
Thread	M8
Halogen-free	yes
Length of external dimensions	40 mm
Max. Tightening torque	5 Nm
With plastic trough	yes
Mounting type	Profile rail
ROHS-conformant	yes
Slot width	10 mm
Clamping range D, max.	52 mm
Clamping range D, min.	46 mm
Surface addition	Untreated
Material addition	Rustproof steel
With counter-trough	no
Material of trough	Plastic
Material quality of trough	Polypropylene