# Technical data sheet

## Clamp clip 2056 H-foot, 2-fold, plastic pressure sleeve, A2

## Item number: 1186330

Clamp clip with hammerhead foot, plastic pressure sleeve made of polypropylene. For vertical and horizontal mounting of 2 single cables on a C-profile rail. For a slot width 16–17 mm. With 1-start screw thread on pressure sleeve, universal hexagonal screw head WAF10, with slot and cross recess. Suitable for assembly indoors and outdoors. Multiple cables should be separated by double sleeves. We recommend the use of a counter-sleeve.

HALOGEN FREE | CE | 16-17 | H

A2 Stainless steel

2B Bright, treated

### Master data

| | |
|---|---|
| Item number | 1186330 |
| Type | BS-H2-K-34 A2 |
| Description 1 | Clamp clip 2056 |
| Description 2 | double |
| Manufacturer | OBO |
| Dimension | 28-34mm |
| Material | Stainless steel 1.4301 |
| Surface<br>Surface standard | Bright, treated |
| Smallest sales unit | 50 |
| Unit of quantity | Piece |
| Weight | 10.2 kg |
| Weight unit | kg/100 pc. |
| CO2 Footprint (GWP) Cradle-to-Gate | 0,6028 kg CO2e / 1 Piece |

# Technical data sheet

## Clamp clip 2056 H-foot, 2-fold, plastic pressure sleeve, A2

## Item number: 1186330

### Dimensions

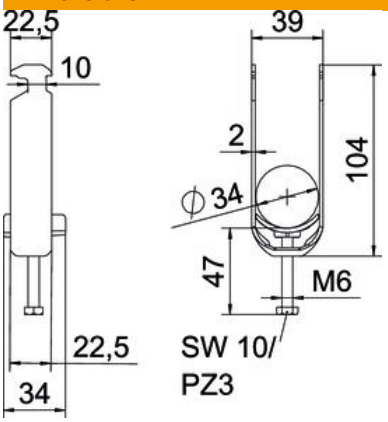


| | |
|---|---|
| Length | 22.5 mm |
| Width | 39 mm |
| Height | 104 mm |
| Plate thickness | 2 mm |
| Dimension A | 22.5 mm |
| Dimension B | 39 mm |
| Dimension C | 34 mm |
| Dimension G (mm) | M6 |
| Dimension H | 104 mm |
| Dimension L | 47 mm |
| Dimension t | 2 mm |

### Technical data

| | |
|---|---|
| Number of cables/pipes | 2 |
| For pipe diameter, max. | 34 mm |
| For pipe diameter, min. | 28 mm |
| for rail with slot width (with interval), max. | 17 mm |
| for rail with slot width (with interval), min. | 16 mm |
| Thread | M6 |
| Halogen-free | yes |
| Length of external dimensions | 34 mm |
| Max. Tightening torque | 3 Nm |
| With plastic trough | yes |
| Mounting type | Profile rail |
| ROHS-conformant | yes |
| Slot width | 10 mm |
| Clamping range D, max. | 34 mm |
| Clamping range D, min. | 28 mm |
| Surface addition | Untreated |
| Material addition | Rustproof steel |
| With counter-trough | no |
| Material of trough | Plastic |
| Material quality of trough | Polypropylene |