Technical data sheet

Clamp clip 2056 H-foot, 1-fold, metal pressure sleeve, FT

Item number: 1186049

Clamp clip with hammerhead foot, metal pressure sleeve with rounded edges to protect the cable. For vertical and horizontal mounting of 1 single cable on a C-profile rail. For a slot width 16–17 mm. With 1-start screw thread on pressure sleeve, universal hexagonal screw head WAF10, with slot and cross recess. Suitable for assembly indoors and outdoors. The counter-sleeve must be ordered separately. In AC circuits the product shall not be used with single core cable in galvanised cable ladders and profile rails because of the inductive heating.

16-17 H E30 E60 E90 40 kA

St Steel

FT Hot-dip galvanised

Master data

Item number	1186049
Type	BS-H1-M-52 FT
Description 1	Clamp clip 2056
Manufacturer	OBO
Dimension	46-52mm
Material	Steel
Surface	Hot-dip galvanised
Surface standard	DIN EN ISO 1461
Smallest sales unit	100
Unit of quantity	Piece
Weight	10.4 kg
Weight unit	kg/100 pc.
CO2 Footprint (GWP) Cradle-to-Gate	0,2723 kg CO2e / 1 Piece

Technical data sheet

Clamp clip 2056 H-foot, 1-fold, metal pressure sleeve, FT

Item number: 1186049

Dimensions

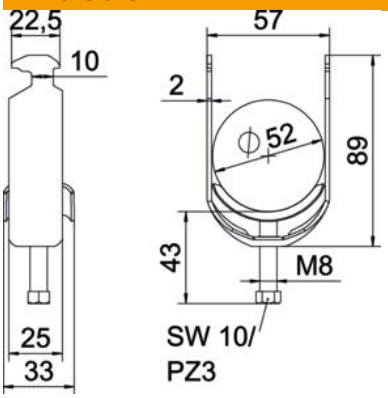

Length	25 mm
Width	57 mm
Height	89 mm
Plate thickness	2 mm
Dimension A	25 mm
Dimension B	57 mm
Dimension C	33 mm
Dimension G (mm)	M8
Dimension H	89 mm
Dimension L	43 mm
Dimension t	2 mm

Technical data

Number of cables/pipes	1
Maintain electrical functions	yes
For pipe diameter, max.	52 mm
For pipe diameter, min.	46 mm
for rail with slot width (with interval), max.	17 mm
for rail with slot width (with interval), min.	16 mm
Thread	M8
Halogen-free	yes
Length of external dimensions	33 mm
Max. Tightening torque	5 Nm
With plastic trough	no
With metal trough	yes
Mounting type	Profile rail
ROHS-conformant	yes
Slot width	10 mm
Clamping range D, max.	52 mm
Clamping range D, min.	46 mm
Surface addition	hot galvanised
Material addition	Steel
With counter-trough	no
Material of trough	Steel